DC INDUCTIVE SHORT FORM PROXIMITY SWITCH CONNECTOR TYPE

ϕ 6.5	
●	○
1 mm , 1.5mm	2 mm , 2.5mm
stainless steel only	
●	

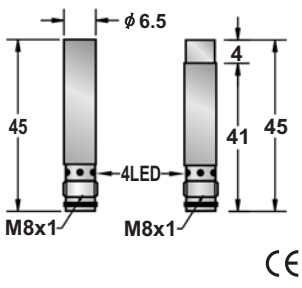

10-30VDC or 5-36VDC
<10%
<10mA
200mA
<0.01mA
-
-
<1.5V(10-30V) or <1.0V(5-36V)
2KHZ
0.1ms/0.1ms
<15%(Sr)
<1.0%(Sr)
IP67
-25 °C - +70 °C
<10%(Sr)
YES
220mA
<10ms
RFI>3V/m / EFT>1KV / ESD>4KV (contact)
IEC 60947-5-2,Part 7.4.1 / IEC 60947-5-2,Part 7.4.2
POM

FCU1-D0601N-ACS3	29	FCU2-D0602N-ACS3
FCU1-D0601N-BCS3	29	FCU2-D0602N-BCS3
FCU1-D0601P-ACS3	30	FCU2-D0602P-ACS3
FCU1-D0601P-BCS3	30	FCU2-D0602P-BCS3

5-36V: ICU*-******-**** type switching distance Sn=1.5mm (shielded), Sn=2.5mm (non-shielded).

Approx.14 g

ϕ 6.5	
●	○
1 mm , 1.5mm	2 mm , 2.5mm
stainless steel only	
●	

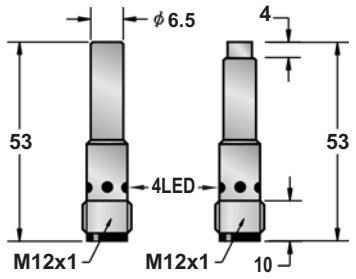

10-30VDC or 5-36VDC
<10%
<10mA
200mA
<0.01mA
-
-
<1.5V(10-30V) or <1.0V(5-36V)
2KHZ
0.1ms/0.1ms
<15%(Sr)
<1.0%(Sr)
IP67
-25 °C - +70 °C
<10%(Sr)
YES
220mA
<10ms
RFI>3V/m / EFT>1KV / ESD>4KV (contact)
IEC 60947-5-2,Part 7.4.1 / IEC 60947-5-2,Part 7.4.2
POM

FCM1-D0601N-ARS4	33	FCM2-D0602N-ARS4
FCM1-D0601N-BRS4	34	FCM2-D0602N-BRS4
FCM1-D0601P-ARS4	35	FCM2-D0602P-ARS4
FCM1-D0601P-BRS4	36	FCM2-D0602P-BRS4

5-36V: ICU*-******-**** type switching distance Sn=1.5mm (shielded), Sn=2.5mm (non-shielded).

Approx.20 g

M 8	
●	○
1 mm , 1.5mm	2 mm , 2.5mm
stainless steel only	
●	

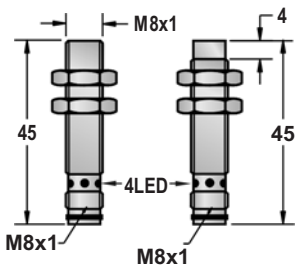

10-30VDC or 5-36VDC
<10%
<10mA
200mA
<0.01mA
-
-
<1.5V(10-30V) or <1.0V(5-36V)
2KHZ
0.1ms/0.1ms
<15%(Sr)
<1.0%(Sr)
IP67
-25 °C - +70 °C
<10%(Sr)
YES
220mA
<10ms
RFI>3V/m / EFT>1KV / ESD>4KV (contact)
IEC 60947-5-2,Part 7.4.1 / IEC 60947-5-2,Part 7.4.2
POM

FCU1-0801N-ACS3	29	FCU2-0802N-ACS3
FCU1-0801N-BCS3	29	FCU2-0802N-BCS3
FCU1-0801P-ACS3	30	FCU2-0802P-ACS3
FCU1-0801P-BCS3	30	FCU2-0802P-BCS3
ICU1-081.5N-ACS3	29	ICU2-082.5N-ACS3
ICU1-081.5N-BCS3	29	ICU2-082.5N-BCS3
ICU1-081.5P-ACS3	30	ICU2-082.5P-ACS3
ICU1-081.5P-BCS3	30	ICU2-082.5P-BCS3

5-36V: ICU*-******-**** type switching distance Sn=1.5mm (shielded), Sn=2.5mm (non-shielded).

Approx.12 g

DC INDUCTIVE SHORT FORM PROXIMITY SWITCH CONNECTOR TYPE

M 8		
●	○	
1 mm , 1.5mm	2 mm , 2.5mm	
stainless steel or nickel plated brass		
●		
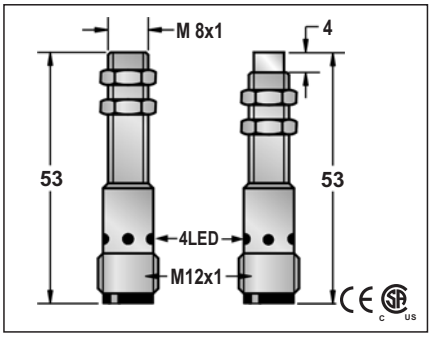		
10-30VDC or 5-36VDC		
<10%		
<10mA		
200mA		
<0.01mA		
-		
-		
<1.5V(10-30V) or <1.0V(5-36V)		
2KHZ		
0.1ms/0.1ms		
<15%(Sr)		
<1.0%(Sr)		
IP67		
-25°C - +70°C		
<10%(Sr)		
YES		
220mA		
<10ms		
RFI>3V/m / EFT>1KV / ESD>4KV (contact)		
IEC 60947-5-2,Part 7.4.1 / IEC 60947-5-2,Part 7.4.2		
POM		
FCM1-0801N-ARS4	33	FCM2-0802N-ARS4
FCM1-0801N-BRS4	34	FCM2-0802N-BRS4
FCM1-0801P-ARS4	35	FCM2-0802P-ARS4
FCM1-0801P-BRS4	36	FCM2-0802P-BRS4
ICM1-0801.5N-ARS4	33	ICM2-0802.5N-ARS4
ICM1-0801.5N-BRS4	34	ICM2-0802.5N-BRS4
ICM1-0801.5P-ARS4	35	ICM2-0802.5P-ARS4
ICM1-0801.5P-BRS4	36	ICM2-0802.5P-BRS4
5-36V: switching distance Sn=1.5mm (shielded),Sn=2.5mm (non-shielded).		
Approx.17 g		

ϕ11		
●	○	
2 mm	4 mm	
stainless steel or nickel plated brass		
●		
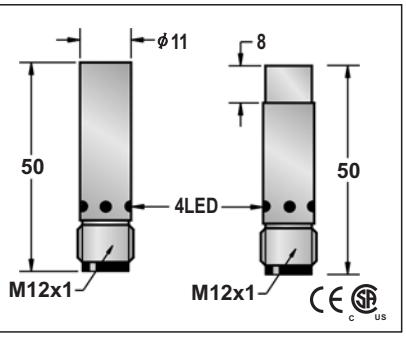		
10-30VDC or 5-36VDC		
<10%		
<10mA		
200mA		
<0.01mA		
-		
-		
<1.5V(10-30V) or <1.0V(5-36V)		
2KHZ	1KHZ	
0.1ms/0.1ms	0.2ms/0.2ms	
<15%(Sr)		
<1.0%(Sr)		
IP67		
-25°C - +70°C		
<10%(Sr)		
YES		
220mA		
<10ms		
RFI>3V/m / EFT>1KV / ESD>4KV (contact)		
IEC 60947-5-2,Part 7.4.1 / IEC 60947-5-2,Part 7.4.2		
POM		
FCM1-D1102N-ARS4	33	FCM2-D1104N-ARS4
FCM1-D1102N-BRS4	34	FCM2-D1104N-BRS4
FCM1-D1102P-ARS4	35	FCM2-D1104P-ARS4
FCM1-D1102P-BRS4	36	FCM2-D1104P-BRS4
ICM1-D1102N-ARS4	33	ICM2-D1104N-ARS4
ICM1-D1102N-BRS4	34	ICM2-D1104N-BRS4
ICM1-D1102P-ARS4	35	ICM2-D1104P-ARS4
ICM1-D1102P-BRS4	36	ICM2-D1104P-BRS4
ICM1-D1102P-SRS4	38	ICM2-D1104P-SRS4
ICM1-D1102N-SRS4	37	ICM2-D1104N-SRS4
Short type changeover 5-36V DC only.		
Approx.24 g		

M 12		
●	○	
2 mm	4 mm	
stainless steel or nickel plated brass		
●		
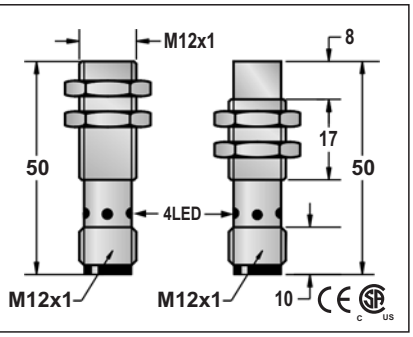		
10-30VDC or 5-36VDC		
<10%		
<10mA		
200mA		
<0.01mA		
-		
-		
<1.5V(10-30V) or <1.0V(5-36V)		
2KHZ	1KHZ	
0.1ms/0.1ms	0.2ms/0.2ms	
<15%(Sr)		
<1.0%(Sr)		
IP67		
-25°C - +70°C		
<10%(Sr)		
YES		
220mA		
<10ms		
RFI>3V/m / EFT>1KV / ESD>4KV (contact)		
IEC 60947-5-2,Part 7.4.1 / IEC 60947-5-2,Part 7.4.2		
POM	PBT	
FCM1-1202N-ARS4	33	FCM2-1204N-ARS4
FCM1-1202N-BRS4	34	FCM2-1204N-BRS4
FCM1-1202P-ARS4	35	FCM2-1204P-ARS4
FCM1-1202P-BRS4	36	FCM2-1204P-BRS4
ICM1-1202N-ARS4	33	ICM2-1204N-ARS4
ICM1-1202N-BRS4	34	ICM2-1204N-BRS4
ICM1-1202P-ARS4	35	ICM2-1204P-ARS4
ICM1-1202P-BRS4	36	ICM2-1204P-BRS4
ICM1-1202P-SRS4	38	ICM2-1204P-SRS4
ICM1-1202N-SRS4	37	ICM2-1204N-SRS4
Short type changeover 5-36V DC only.		
approx.25 g	Approx.23 g	

DC INDUCTIVE SHORT FORM PROXIMITY SWITCH CONNECTOR TYPE

M 18		M 30		20X32X10
●	○	●	○	●
5 mm	8 mm	10 mm	15 mm	5 mm
stainless steel or nickel plated brass		stainless steel or nickel plated brass		die-cast
●		●		●

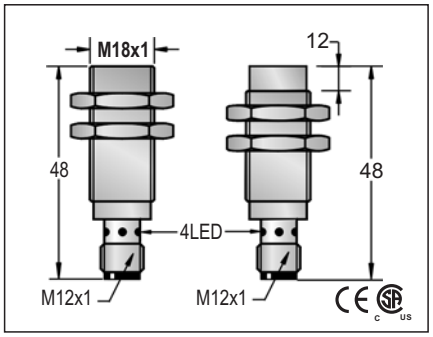

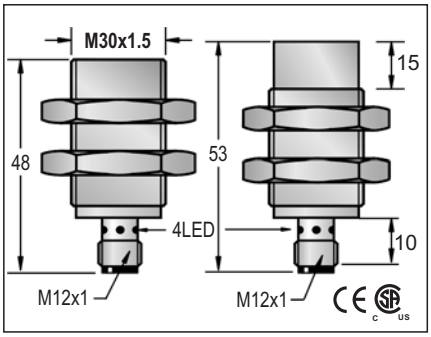

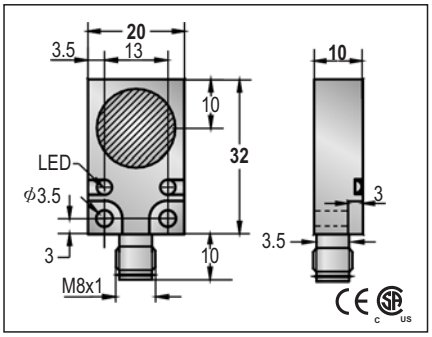

M 18		M 30		20X32X10
10-30VDC or 5-36VDC or 10-55VDC		10-30VDC or 5-36VDC or 10-55VDC		10-30VDC or 5-36VDC or 10-55VDC
<10%		<10%		<10%
<10mA	<20mA	<10mA	<20mA	<10mA / <20mA
200mA		200mA		200mA
<0.01mA		<0.01mA		<0.01mA
-		-		-
-		-		-
<1.5V or <1.0V or <2.0V		<1.5V or <1.0V or <2.0V		<1.5V or <1.0V or <2.0V
1KHZ	500HZ	300HZ	150HZ	1KHZ
0.2ms/0.2ms	0.5ms/0.5ms	0.5ms/0.5ms	1ms/1ms	0.2ms/0.2ms
<15%(Sr)		<15%(Sr)		<15%(Sr)
<1.0%(Sr)		<1.0%(Sr)		<1.0%(Sr)
IP67		IP67		IP67
-25 °C - +70 °C		-25 °C - +70 °C		-25 °C - +70 °C
<10%(Sr)		<10%(Sr)		<10%(Sr)
YES		YES		YES
220mA		220mA		220mA
<10ms		<10ms		<10ms
RFI>3V/m / EFT>1KV / ESD>4KV (contact)		RFI>3V/m / EFT>1KV / ESD>4KV (contact)		RFI>3V/m / EFT>1KV / ESD>4KV (contact)
IEC 60947-5-2,Part 7.4.1 / IEC 60947-5-2,Part 7.4.2		IEC 60947-5-2,Part 7.4.1 / IEC 60947-5-2,Part 7.4.2		IEC 60947-5-2,Part 7.4.1 / IEC 60947-5-2,Part 7.4.2
PBT		PBT		PBT

FCM1-1805N-ARS4	33	FCM2-1808N-ARS4	FCM1-3010N-ARS4	33	FCM2-3015N-ARS4	FQM1-2005N-ACU3T	29
FCM1-1805N-BRS4	34	FCM2-1808N-BRS4	FCM1-3010N-BRS4	34	FCM2-3015N-BRS4	FQM1-2005N-BCU3T	29
FCM1-1805P-ARS4	35	FCM2-1808P-ARS4	FCM1-3010P-ARS4	35	FCM2-3015P-ARS4	FQM1-2005P-ACU3T	30
FCM1-1805P-BRS4	36	FCM2-1808P-BRS4	FCM1-3010P-BRS4	36	FCM2-3015P-BRS4	FQM1-2005P-BCU3T	30
FCM1-1805P-SRS4	38	FCM2-1808P-SRS4	FCM1-3010P-SRS4	38	FCM2-3015P-SRS4	FQM1-2005P-SCU4T	32
FCM1-1805N-SRS4	37	FCM2-1808N-SRS4	FCM1-3010N-SRS4	37	FCM2-3015N-SRS4	FQM1-2005N-SCU4T	31
FCM1-1805C-ARS4	40	FCM2-1808C-ARS4	FCM1-3010C-ARS4	40	FCM2-3015C-ARS4	FQM1-2005C-ACU3T	39
FCM1-1805C-BRS4	78	FCM2-1808C-BRS4	FCM1-3010C-BRS4	78	FCM2-3015C-BRS4	FQM1-2005C-BCU3T	77
HCM1-1805N-ARS4	33	HCM2-1808N-ARS4	HCM1-3010N-ARS4	33	HCM2-3015N-ARS4		
HCM1-1805N-BRS4	34	HCM2-1808N-BRS4	HCM1-3010N-BRS4	34	HCM2-3015N-BRS4		
HCM1-1805P-ARS4	35	HCM2-1808P-ARS4	HCM1-3010P-ARS4	35	HCM2-3015P-ARS4		
HCM1-1805P-BRS4	36	HCM2-1808P-BRS4	HCM1-3010P-BRS4	36	HCM2-3015P-BRS4		
ICM1-1805N-ARS4	33	ICM2-1808N-ARS4	ICM1-3010N-ARS4	33	ICM2-3015N-ARS4		
ICM1-1805N-BRS4	34	ICM2-1808N-BRS4	ICM1-3010N-BRS4	34	ICM2-3015N-BRS4		
ICM1-1805P-ARS4	35	ICM2-1808P-ARS4	ICM1-3010P-ARS4	35	ICM2-3015P-ARS4		
ICM1-1805P-BRS4	36	ICM2-1808P-BRS4	ICM1-3010P-BRS4	36	ICM2-3015P-BRS4		
ICM1-1805P-SRS4	38	ICM2-1808P-SRS4	ICM1-3010P-SRS4	38	ICM2-3015P-SRS4		
ICM1-1805N-SRS4	37	ICM2-1808N-SRS4	ICM1-3010N-SRS4	37	ICM2-3015N-SRS4		

1. Voltage Drop:<1.5V(10-30V),<1V(5-36V), <2V(10-55V).
2. 10-55V type: No Load Current < 20mA.

Please see Page 18 for details and specifications of DC 2-Wire models on this page.

M 18	M 30		20X32X10
Approx.50 g	Approx.111 g	Approx.121 g	Approx.55 g