DC INDUCTIVE PLASTIC HOUSING CONNECTOR TYPE

M 12			M 12			M 12		
●	○		●	○		●	○	
2 mm	4 mm		2 mm	4 mm		2 mm	4 mm	
PBT RESIN			PBT RESIN			PBT RESIN		
●			●			●		
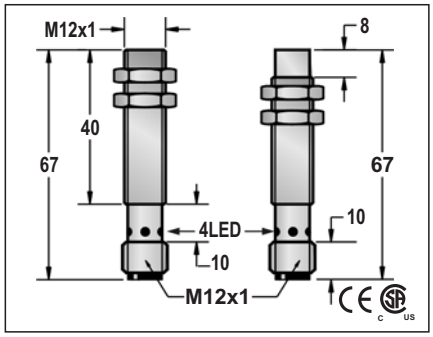			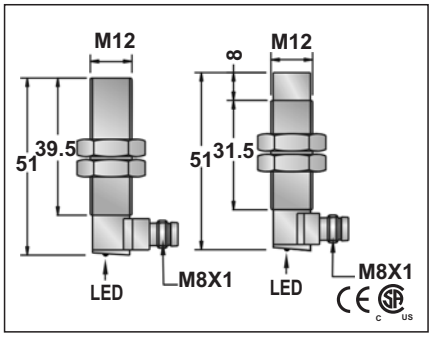			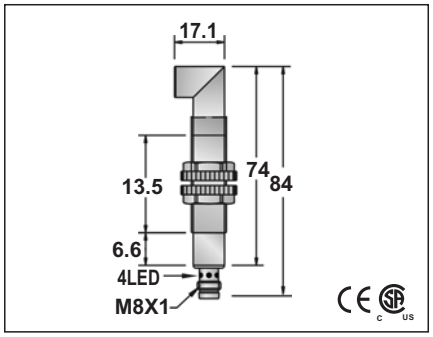		
10-30VDC or 5-36VDC or 10-55VDC			10-30VDC or 5-36VDC or 10-55VDC			10-30VDC or 5-36VDC or 10-55VDC		
<10%			<10%			<10%		
<10mA	<20mA		<10mA	<20mA		<10mA	<20mA	
200mA			200mA			200mA		
<0.01mA			<0.01mA			<0.01mA		
-			-			-		
-			-			-		
<1.5V or <1.0V or <2.0V			<1.5V or <1.0V or <2.0V			<1.5V or <1.0V or <2.0V		
2KHZ	1KHZ		2KHZ	1KHZ		2KHZ	1KHZ	
0.1ms/0.1ms	0.2ms/0.2ms		0.1ms/0.1ms	0.2ms/0.2ms		0.1ms/0.1ms	0.2ms/0.2ms	
<15%(Sr)			<15%(Sr)			<15%(Sr)		
<1.0%(Sr)			<1.0%(Sr)			<1.0%(Sr)		
IP67			IP67			IP67		
-25 °C - +70 °C			-25 °C - +70 °C			-25 °C - +70 °C		
<10%(Sr)			<10%(Sr)			<10%(Sr)		
YES			YES			YES		
220mA			220mA			220mA		
<10ms			<10ms			<10ms		
RFI>3V/m / EFT>1KV / ESD>4KV (contact)			RFI>3V/m / EFT>1KV / ESD>4KV (contact)			RFI>3V/m / EFT>1KV / ESD>4KV (contact)		
IEC 60947-5-2,Part 7.4.1 / IEC 60947-5-2,Part 7.4.2			IEC 60947-5-2,Part 7.4.1 / IEC 60947-5-2,Part 7.4.2			IEC 60947-5-2,Part 7.4.1 / IEC 60947-5-2,Part 7.4.2		
POM	PBT		POM	PBT		POM		
FCP1-1202N-ARU4	33	FCP2-1204N-ARU4	FCP1-1202N-ACU3Y	33	FCP2-1204N-ACU3Y	FCP1-1202N-ACU3Z	33	FCP2-1204N-ACU3Z
FCP1-1202N-BRU4	34	FCP2-1204N-BRU4	FCP1-1202N-BCU3Y	34	FCP2-1204N-BCU3Y	FCP1-1202N-BCU3Z	34	FCP2-1204N-BCU3Z
FCP1-1202P-ARU4	35	FCP2-1204P-ARU4	FCP1-1202P-ACU3Y	35	FCP2-1204P-ACU3Y	FCP1-1202P-ACU3Z	35	FCP2-1204P-ACU3Z
FCP1-1202P-BRU4	36	FCP2-1204P-BRU4	FCP1-1202P-BCU3Y	36	FCP2-1204P-BCU3Y	FCP1-1202P-BCU3Z	36	FCP2-1204P-BCU3Z
FCP1-1202P-SRU4	38	FCP2-1204P-SRU4	FCP1-1202P-SCU4Y	38	FCP2-1204P-SCU4Y	FCP1-1202P-SCU4Z	38	FCP2-1204P-SCU4Z
FCP1-1202N-SRU4	37	FCP2-1204N-SRU4	FCP1-1202N-SCU4Y	37	FCP2-1204N-SCU4Y	FCP1-1202N-SCU4Z	37	FCP2-1204N-SCU4Z
FCP1-1202C-ARU4	40	FCP2-1204C-ARU4	FCP1-1202C-ACU3Y	40	FCP2-1204C-ACU3Y	FCP1-1202C-ACU3Z	40	FCP2-1204C-ACU3Z
FCP1-1202C-BRU4	78	FCP2-1204C-BRU4	FCP1-1202C-BCU3Y	78	FCP2-1204C-BCU3Y	FCP1-1202C-BCU3Z	78	FCP2-1204C-BCU3Z
ICP1-1202N-ARU4	33	ICP2-1204N-ARU4	ICP1-1202N-ACU3Y	33	ICP2-1204N-ACU3Y	ICP1-1202N-ACU3Z	33	ICP2-1204N-ACU3Z
ICP1-1202N-BRU4	34	ICP2-1204N-BRU4	ICP1-1202N-BCU3Y	34	ICP2-1204N-BCU3Y	ICP1-1202N-BCU3Z	34	ICP2-1204N-BCU3Z
ICP1-1202P-ARU4	35	ICP2-1204P-ARU4	ICP1-1202P-ACU3Y	35	ICP2-1204P-ACU3Y	ICP1-1202P-ACU3Z	35	ICP2-1204P-ACU3Z
ICP1-1202P-BRU4	36	ICP2-1204P-BRU4	ICP1-1202P-BCU3Y	36	ICP2-1204P-BCU3Y	ICP1-1202P-BCU3Z	36	ICP2-1204P-BCU3Z
1. Voltage Drop:<1.5V(10-30V),<1V(5-36V), <2V(10-55V). 2. 10-55V type: No Load Current < 20mA.			Please see Page 18 for details and specifications of DC 2-Wire models on this page.					
Approx.14 g			Approx.14 g			Approx.14 g		

DC INDUCTIVE PLASTIC HOUSING CONNECTOR TYPE

M 18		
●	○	
5 mm	8 mm	
PBT RESIN		
●		

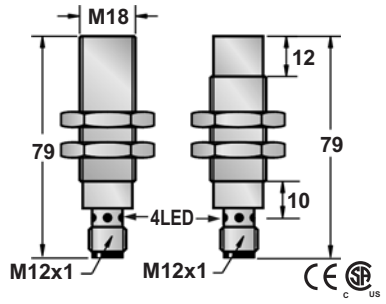

10-30VDC or 5-36VDC or 10-55VDC		
<10%		
<10mA	<20mA	
200mA		
<0.01mA		
-		
-		
<1.5V or <1.0V or <2.0V		
1KHZ	500HZ	
0.2ms/0.2ms	0.5ms/0.5ms	
<15%		
<1.0%(Sr)		
IP67		
-25 °C - +70 °C		
<10%(Sr)		
YES		
220mA		
<10ms		
RFI>3V/m / EFT>1KV / ESD>4KV (contact)		
IEC 60947-5-2,Part 7.4.1 / IEC 60947-5-2,Part 7.4.2		
PBT		
FCP1-1805N-ARU4	33	FCP2-1808N-ARU4
FCP1-1805N-BRU4	34	FCP2-1808N-BRU4
FCP1-1805P-ARU4	35	FCP2-1808P-ARU4
FCP1-1805P-BRU4	36	FCP2-1808P-BRU4
FCP1-1805P-SRU4	38	FCP2-1808P-SRU4
FCP1-1805N-SRU4	37	FCP2-1808N-SRU4
FCP1-1805C-ARU4	40	FCP2-1808C-ARU4
FCP1-1805C-BRU4	78	FCP2-1808C-BRU4
ICP1-1805N-ARU4	33	ICP2-1808N-ARU4
ICP1-1805N-BRU4	34	ICP2-1808N-BRU4
ICP1-1805P-ARU4	35	ICP2-1808P-ARU4
ICP1-1805P-BRU4	36	ICP2-1808P-BRU4

1. Voltage Drop:<1.5V(10-30V),<1V(5-36V), <2V(10-55V).
2. 10-55V type: No Load Current < 20mA.

Approx.35 g

M 18		
●	○	
5 mm	8 mm	
PBT RESIN		
●		

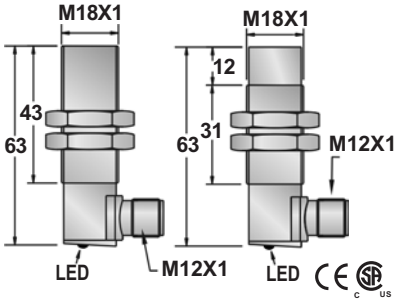

10-30VDC or 5-36VDC or 10-55VDC		
<10%		
<10mA	<20mA	
200mA		
<0.01mA		
-		
-		
<1.5V or <1.0V or <2.0V		
1KHZ	500HZ	
0.2ms/0.2ms	0.5ms/0.5ms	
<15%		
<1.0%(Sr)		
IP67		
-25 °C - +70 °C		
<10%(Sr)		
YES		
220mA		
<10ms		
RFI>3V/m / EFT>1KV / ESD>4KV (contact)		
IEC 60947-5-2,Part 7.4.1 / IEC 60947-5-2,Part 7.4.2		
PBT		
FCP1-1805N-ARU4Y	33	FCP2-1808N-ARU4Y
FCP1-1805N-BRU4Y	34	FCP2-1808N-BRU4Y
FCP1-1805P-ARU4Y	35	FCP2-1808P-ARU4Y
FCP1-1805P-BRU4Y	36	FCP2-1808P-BRU4Y
FCP1-1805P-SRU4Y	38	FCP2-1808P-SRU4Y
FCP1-1805N-SRU4Y	37	FCP2-1808N-SRU4Y
FCP1-1805C-ARU4Y	40	FCP2-1808C-ARU4Y
FCP1-1805C-BRU4Y	78	FCP2-1808C-BRU4Y
ICP1-1805N-ARU4Y	33	ICP2-1808N-ARU4Y
ICP1-1805N-BRU4Y	34	ICP2-1808N-BRU4Y
ICP1-1805P-ARU4Y	35	ICP2-1808P-ARU4Y
ICP1-1805P-BRU4Y	36	ICP2-1808P-BRU4Y

Please see Page 18 for details and specifications of DC 2-Wire models on this page.

Approx.35 g

M 18		
●	○	
5 mm	8 mm	
PBT RESIN		
●		

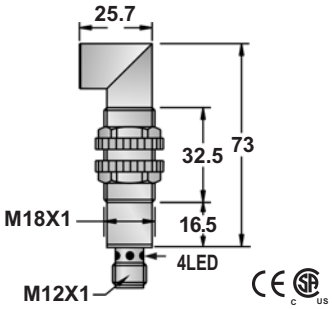

10-30VDC or 5-36VDC or 10-55VDC		
<10%		
<10mA	<20mA	
200mA		
<0.01mA		
-		
-		
<1.5V or <1.0V or <2.0V		
1KHZ	500HZ	
0.2ms/0.2ms	0.5ms/0.5ms	
<15%		
<1.0%(Sr)		
IP67		
-25 °C - +70 °C		
<10%(Sr)		
YES		
220mA		
<10ms		
RFI>3V/m / EFT>1KV / ESD>4KV (contact)		
IEC 60947-5-2,Part 7.4.1 / IEC 60947-5-2,Part 7.4.2		
PBT		
FCP1-1805N-ARU4Z	33	FCP2-1808N-ARU4Z
FCP1-1805N-BRU4Z	34	FCP2-1808N-BRU4Z
FCP1-1805P-ARU4Z	35	FCP2-1808P-ARU4Z
FCP1-1805P-BRU4Z	36	FCP2-1808P-BRU4Z
FCP1-1805P-SRU4Z	38	FCP2-1808P-SRU4Z
FCP1-1805N-SRU4Z	37	FCP2-1808N-SRU4Z
FCP1-1805C-ARU4Z	40	FCP2-1808C-ARU4Z
FCP1-1805C-BRU4Z	78	FCP2-1808C-BRU4Z

Approx.35 g

DC INDUCTIVE PLASTIC HOUSING CONNECTOR TYPE

M 30		M 30		ϕ34	
●	○	●	○	●	○
10 mm	15 mm	10 mm	15 mm	15 mm	20 mm
PBT RESIN		PBT RESIN		PBT RESIN	
●		●		●	

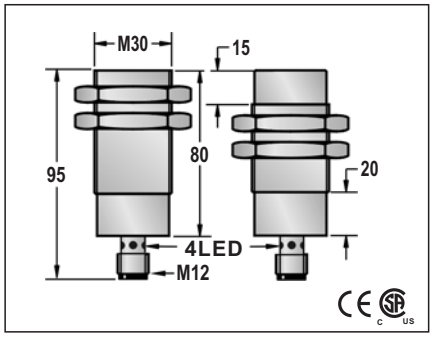

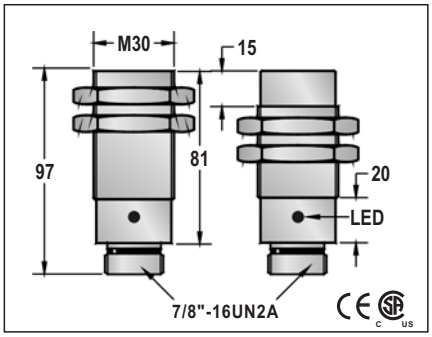

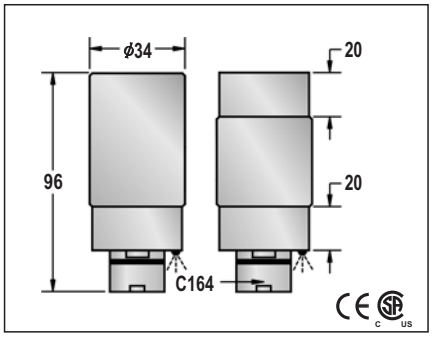

10-30VDC or 5-36VDC or 10-55VDC			10-30VDC or 5-36VDC or 10-55VDC			10-30VDC or 5-36VDC or 10-55VDC	
<10%			<10%			<10%	
<10mA	<20mA		<10mA	<20mA		<10mA	<20mA
200mA			200mA			200mA	
<0.01mA			<0.01mA			<0.01mA	
-			-			-	
-			-			-	
<1.5V or <1.0V or <2.0V			<1.5V or <1.0V or <2.0V			<1.5V or <1.0V or <2.0V	
300HZ	150HZ		300HZ	150HZ		300HZ	150HZ
0.5ms/0.5ms	1ms/1ms		0.5ms/0.5ms	1ms/1ms		0.5ms/0.5ms	1ms/1ms
<15%(Sr)			<15%(Sr)			<15%(Sr)	
<1.0%(Sr)			<1.0%(Sr)			<1.0%(Sr)	
IP67			IP67			IP67	
-25 °C - +70 °C			-25 °C - +70 °C			-25 °C - +70 °C	
<10%(Sr)			<10%(Sr)			<10%(Sr)	
YES			YES			YES	
220mA			220mA			220mA	
<10ms			<10ms			<10ms	
RFI>3V/m / EFT>1KV / ESD>4KV (contact)			RFI>3V/m / EFT>1KV / ESD>4KV (contact)			RFI>3V/m / EFT>1KV / ESD>4KV (contact)	
IEC 60947-5-2,Part 7.4.1 / IEC 60947-5-2,Part 7.4.2			IEC 60947-5-2,Part 7.4.1 / IEC 60947-5-2,Part 7.4.2			IEC 60947-5-2,Part 7.4.1 / IEC 60947-5-2,Part 7.4.2	
PBT			PBT			PBT	
FCP1-3010N-ARU4	33	FCP2-3015N-ARU4	FCP1-3010N-AZU4	41	FCP2-3015N-AZU4	FCP1-D3415N-AYU5	49	FCP2-D3420N-AYU5
FCP1-3010N-BRU4	34	FCP2-3015N-BRU4	FCP1-3010N-BZU4	42	FCP2-3015N-BZU4	FCP1-D3415N-BYU5	50	FCP2-D3420N-BYU5
FCP1-3010P-ARU4	35	FCP2-3015P-ARU4	FCP1-3010P-AZU4	43	FCP2-3015P-AZU4	FCP1-D3415P-AYU5	51	FCP2-D3420P-AYU5
FCP1-3010P-BRU4	36	FCP2-3015P-BRU4	FCP1-3010P-BZU4	44	FCP2-3015P-BZU4	FCP1-D3415P-BYU5	52	FCP2-D3420P-BYU5
FCP1-3010P-SRU4	38	FCP2-3015P-SRU4	FCP1-3010P-SZU4	46	FCP2-3015P-SZU4	FCP1-D3415P-SYU5	54	FCP2-D3420P-SYU5
FCP1-3010N-SRU4	37	FCP2-3015N-SRU4	FCP1-3010N-SZU4	45	FCP2-3015N-SZU4	FCP1-D3415N-SYU5	53	FCP2-D3420N-SYU5
FCP1-3010C-ARU4	40	FCP2-3015C-ARU4	FCP1-3010C-AZU4	47	FCP2-3015C-AZU4	FCP1-D3415C-AYU5	48	FCP2-D3420C-AYU5
FCP1-3010C-BRU4	78	FCP2-3015C-BRU4	FCP1-3010C-BZU4	79	FCP2-3015C-BZU4	FCP1-D3415C-BYU5	80	FCP2-D3420C-BYU5

1. **Voltage Drop:<1.5V** (10-30V),**<1V** (5-36V), **<2V** (10-55V).
2. **10-55V type: No Load Current < 20mA.**

Please see Page 18 for details and specifications of DC 2-Wire models on this page.

Approx.120 g	Approx.120 g	Approx.162 g