PART B-01 ~ B-13

SIDE SENSING DC INDUCTIVE PROXIMITY SWITCH

Diameter	ϕ4	ϕ4	ϕ4
● Shielded ○ non-Shielded	●	●	●
Switching Distance Sn mm	0.8 mm	0.8 mm	0.8 mm
Housing Material	stainless steel	stainless steel	stainless steel
● With LED ○ Without LED	●	●	●
Dimensions (unit: mm)	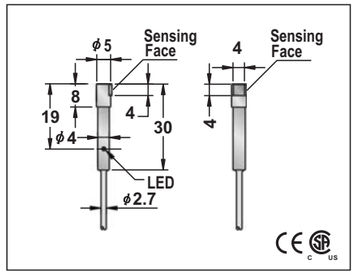	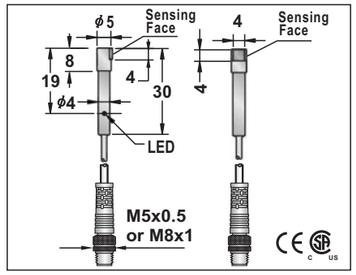	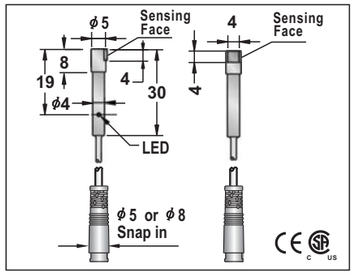
Operating Voltage	10-30VDC or 5-36V	10-30VDC or 5-36V	10-30VDC or 5-36V
Ripple	<10%	<10%	<10%
No Load Current	<10mA	<10mA	<10mA
Max. Load Current	200mA	200mA	200mA
Leakge Current	<0.01mA	<0.01mA	<0.01mA
Surge Current	-	-	-
Min. Load Current	-	-	-
Voltage Drop	<1.5V	<1.5V	<1.5V
Switching Frequency	2KHZ	2KHZ	2KHZ
Response Time	0.1ms/0.1ms	0.1ms/0.1ms	0.1ms/0.1ms
Switching Hysteresis	<15%(Sr)	<15%(Sr)	<15%(Sr)
Repeat Accuracy	<1.0%(Sr)	<1.0%(Sr)	<1.0%(Sr)
Protection Category	IP67	IP67	IP67
Operating Temperature	-25°C - +70°C	-25°C - +70°C	-25°C - +70°C
Temperature Drift	<10%(Sr)	<10%(Sr)	<10%(Sr)
Short Circuit Protection	YES	YES	YES
Overload Trip Point	220mA	220mA	220mA
Time Delay Before Availability	<10ms	<10ms	<10ms
EMC	RFI>3V/m / EFT>1KV / ESD>4KV (contact)	RFI>3V/m / EFT>1KV / ESD>4KV (contact)	RFI>3V/m / EFT>1KV / ESD>4KV (contact)
Shock / Vibration	IEC 60947-5-2,Part 7.4.1 / IEC 60947-5-2,Part 7.4.2	IEC 60947-5-2,Part 7.4.1 / IEC 60947-5-2,Part 7.4.2	IEC 60947-5-2,Part 7.4.1 / IEC 60947-5-2,Part 7.4.2
Material Active Face	POM	POM	POM

DC 3 wire 10-30V NPN N.O.	FCU1-D040.8N-A3U2T	1	FCU1-D040.8N-A3U0.2T/P5	25	FCU1-D040.8N-A3U0.2T/P8	29	FCU1-D040.8N-A3U0.2T/SN5	25	FCU1-D040.8N-A3U0.2T/SN8	29
DC 3 wire 10-30V NPN N.C.	FCU1-D040.8N-B3U2T	2	FCU1-D040.8N-B3U0.2T/P5	26	FCU1-D040.8N-B3U0.2T/P8	30	FCU1-D040.8N-B3U0.2T/SN5	26	FCU1-D040.8N-B3U0.2T/SN8	30
DC 3 wire 10-30V PNP N.O.	FCU1-D040.8P-A3U2T	3	FCU1-D040.8P-A3U0.2T/P5	27	FCU1-D040.8P-A3U0.2T/P8	31	FCU1-D040.8P-A3U0.2T/SN5	27	FCU1-D040.8P-A3U0.2T/SN8	31
DC 3 wire 10-30V PNP N.C.	FCU1-D040.8P-B3U2T	4	FCU1-D040.8P-B3U0.2T/P5	28	FCU1-D040.8P-B3U0.2T/P8	32	FCU1-D040.8P-B3U0.2T/SN5	28	FCU1-D040.8P-B3U0.2T/SN8	32
DC 4 wire 10-30V Changeover PNP (N.O. & N.C.)										
DC 4 wire 10-30V Changeover NPN (N.O. & N.C.)										
DC 2 wire 10-60V N.O.										
DC 2 wire 10-60V N.C.										
DC 3 wire 10-55v NPN N.O. or NAMUR										
DC 3 wire 10-55v NPN N.C.										
DC 3 wire 10-55v PNP N.O.										
DC 3 wire 10-55v PNP N.C.										
DC 3 wire 5-36V NPN N.O.	ICU1-D040.8N-A3U2T	1	ICU1-D040.8N-A3U0.2T/P5	25	ICU1-D040.8N-A3U0.2T/P8	29	ICU1-D040.8N-A3U0.2T/SN5	25	ICU1-D040.8N-A3U0.2T/SN8	29
DC 3 wire 5-36V NPN N.C.	ICU1-D040.8N-B3U2T	2	ICU1-D040.8N-B3U0.2T/P5	26	ICU1-D040.8N-B3U0.2T/P8	30	ICU1-D040.8N-B3U0.2T/SN5	26	ICU1-D040.8N-B3U0.2T/SN8	30
DC 3 wire 5-36V PNP N.O.	ICU1-D040.8P-A3U2T	3	ICU1-D040.8P-A3U0.2T/P5	27	ICU1-D040.8P-A3U0.2T/P8	31	ICU1-D040.8P-A3U0.2T/SN5	27	ICU1-D040.8P-A3U0.2T/SN8	31
DC 3 wire 5-36V PNP N.C.	ICU1-D040.8P-B3U2T	4	ICU1-D040.8P-B3U0.2T/P5	28	ICU1-D040.8P-B3U0.2T/P8	32	ICU1-D040.8P-B3U0.2T/SN5	28	ICU1-D040.8P-B3U0.2T/SN8	32
DC 4 wire 5-36V Changeover PNP (N.O & N.C.)										
DC 4 wire 5-36V Changeover NPN (N.O & N.C.)										

Remark	NAMUR type specifications see page 23.	FCU***/P5 └─M5 Pigtail mode FCU***/P8 └─M8 Pigtail mode	FCU***/SN5 └─ϕ5 Pigtail mode FCU***/SN8 └─ϕ8 Pigtail mode
Cable 2M (PVC)	2.7ϕ3x0.15	2.7ϕ3x0.15	2.7ϕ3x0.15
Weight	approx.25 g	approx.25 g / Approx.26 g	approx.25 g / Approx.26 g

SIDE SENSING DC INDUCTIVE PROXIMITY SWITCH

ϕ4	ϕ4	M5
●	●	●
0.8 mm	0.8 mm	0.8 mm
stainless steel	stainless steel	stainless steel
●	●	●
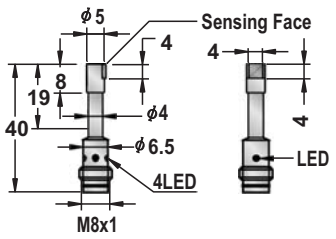	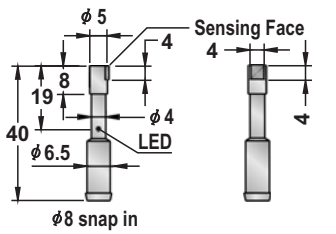	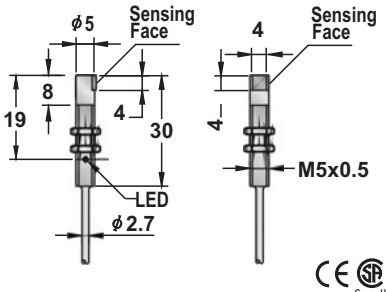
10-30VDC or 5-36V	10-30VDC or 5-36V	10-30VDC or 5-36V
<10%	<10%	<10%
<10mA	<10mA	<10mA
200mA	200mA	200mA
<0.01mA	<0.01mA	<0.01mA
-	-	-
-	-	-
<1.5V	<1.5V	<1.5V
2KHZ	2KHZ	2KHZ
0.1ms/0.1ms	0.1ms/0.1ms	0.1ms/0.1ms
<15%(Sr)	<15%(Sr)	
<1.0%(Sr)	<1.0%(Sr)	<1.0%(Sr)
IP67	IP67	IP67
-25°C - +70°C	-25°C - +70°C	-25°C - +70°C
<10%(Sr)	<10%(Sr)	<10%(Sr)
YES	YES	YES
220mA	220mA	220mA
<10ms	<10ms	<10ms
RFI>3V/m / EFT>1KV / ESD>4KV (contact)	RFI>3V/m / EFT>1KV / ESD>4KV (contact)	RFI>3V/m / EFT>1KV / ESD>4KV (contact)
IEC 60947-5-2,Part 7.4.1 / IEC 60947-5-2,Part 7.4.2	IEC 60947-5-2,Part 7.4.1 / IEC 60947-5-2,Part 7.4.2	IEC 60947-5-2,Part 7.4.1 / IEC 60947-5-2,Part 7.4.2
POM	POM	POM

FCU1-D040.8N-ACU3T	29	FCU1-D040.8N-ACU3T/SN8	29	FCU1-050.8N-A3U2T	1
FCU1-D040.8N-BCU3T	29	FCU1-D040.8N-BCU3T/SN8	29	FCU1-050.8N-B3U2T	2
FCU1-D040.8P-ACU3T	30	FCU1-D040.8P-ACU3T/SN8	30	FCU1-050.8P-A3U2T	3
FCU1-D040.8P-BCU3T	30	FCU1-D040.8P-BCU3T/SN8	30	FCU1-050.8P-B3U2T	4
				FCU1-050.8NUT	21
ICU1-D040.8N-ACU3T	29	ICU1-D040.8N-ACU3T/SN8	29	ICU1-050.8N-A3U2T	1
ICU1-D040.8N-BCU3T	29	ICU1-D040.8N-BCU3T/SN8	29	ICU1-050.8N-B3U2T	2
ICU1-D040.8P-ACU3T	30	ICU1-D040.8P-ACU3T/SN8	30	ICU1-050.8P-A3U2T	3
ICU1-D040.8P-BCU3T	30	ICU1-D040.8P-BCU3T/SN8	30	ICU1-050.8P-B3U2T	4

Connecting cable: M8 female pico-style,screw locking,with moulded cable.	Connecting cable: Female pico-style snap-in device,with moulded cable.	
		2.7ϕ3x0.15
approx.14 g	approx.14 g	Approx.25 g

SIDE SENSING DC INDUCTIVE PROXIMITY SWITCH

M5	M5	M5
●	●	●
0.8 mm	0.8 mm	0.8 mm
stainless steel	stainless steel	stainless steel
●	●	●

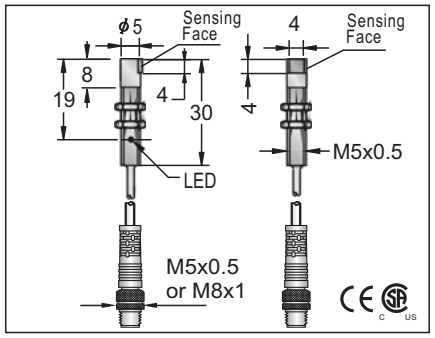

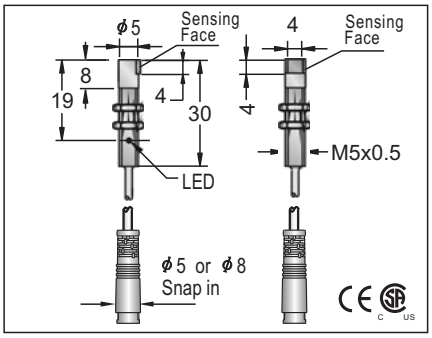

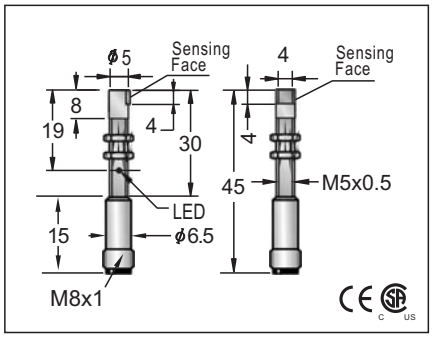

10-30VDC or 5-36VDC	10-30VDC or 5-36VDC	10-30VDC or 5-36VDC
<10%	<10%	<10%
<10mA	<10mA	<10mA
200mA	200mA	200mA
<0.01mA	<0.01mA	<0.01mA
-	-	-
-	-	-
<1.5V	<1.5V	<1.5V
2KHZ	2KHZ	2KHZ
0.1ms/0.1ms	0.1ms/0.1ms	0.1ms/0.1ms
<1.0%(Sr)	<1.0%(Sr)	<1.0%(Sr)
IP67	IP67	IP67
-25°C - +70°C	-25°C - +70°C	-25°C - +70°C
<10%(Sr)	<10%(Sr)	<10%(Sr)
YES	YES	YES
220mA	220mA	220mA
<10ms	<10ms	<10ms
RFI>3V/m / EFT>1KV / ESD>4KV (contact)	RFI>3V/m / EFT>1KV / ESD>4KV (contact)	RFI>3V/m / EFT>1KV / ESD>4KV (contact)
IEC 60947-5-2,Part 7.4.1 / IEC 60947-5-2,Part 7.4.2	IEC 60947-5-2,Part 7.4.1 / IEC 60947-5-2,Part 7.4.2	IEC 60947-5-2,Part 7.4.1 / IEC 60947-5-2,Part 7.4.2
POM	POM	POM

FCU1-050.8N-A3U0.2T/P5	25	FCU1-050.8N-A3U0.2T/P8	29	FCU1-050.8N-A3U0.2T/SN5	25	FCU1-050.8N-A3U0.2T/SN8	29
FCU1-050.8N-B3U0.2T/P5	26	FCU1-050.8N-B3U0.2T/P8	30	FCU1-050.8N-B3U0.2T/SN5	26	FCU1-050.8N-B3U0.2T/SN8	30
FCU1-050.8P-A3U0.2T/P5	27	FCU1-050.8P-A3U0.2T/P8	31	FCU1-050.8P-A3U0.2T/SN5	27	FCU1-050.8P-A3U0.2T/SN8	31
FCU1-050.8P-B3U0.2T/P5	28	FCU1-050.8P-B3U0.2T/P8	32	FCU1-050.8P-B3U0.2T/SN5	28	FCU1-050.8P-B3U0.2T/SN8	32
ICU1-050.8N-A3U0.2T/P5	25	ICU1-050.8N-A3U0.2T/P8	29	ICU1-050.8N-A3U0.2T/SN5	25	ICU1-050.8N-A3U0.2T/SN8	29
ICU1-050.8N-B3U0.2T/P5	26	ICU1-050.8N-B3U0.2T/P8	30	ICU1-050.8N-B3U0.2T/SN5	26	ICU1-050.8N-B3U0.2T/SN8	30
ICU1-050.8P-A3U0.2T/P5	27	ICU1-050.8P-A3U0.2T/P8	31	ICU1-050.8P-A3U0.2T/SN5	27	ICU1-050.8P-A3U0.2T/SN8	31
ICU1-050.8P-B3U0.2T/P5	28	ICU1-050.8P-B3U0.2T/P8	32	ICU1-050.8P-B3U0.2T/SN5	28	ICU1-050.8P-B3U0.2T/SN8	32

FCU1-050.8N-ACU3T	29
FCU1-050.8N-BCU3T	29
FCU1-050.8P-ACU3T	30
FCU1-050.8P-BCU3T	30

FCU***/P5
└─M5 Pigtail mode
FCU***/P8
└─M8 Pigtail mode

FCU***/SN5
└─ϕ5 Pigtail mode
FCU***/SN8
└─ϕ8 Pigtail mode

2.7ϕ3x0.15		2.7ϕ3x0.15		
Approx.25 g	Approx.26 g	Approx.25 g	Approx.26 g	Approx.25 g

SIDE SENSING DC INDUCTIVE PROXIMITY SWITCH

ϕ 6.5		ϕ 6.5	ϕ 6.5	
●	●	●	●	●
1.0mm	1.5mm	1.5mm	1.0mm	1.5mm
stainless steel		stainless steel or nickel plated brass	stainless steel	
●		●	●	

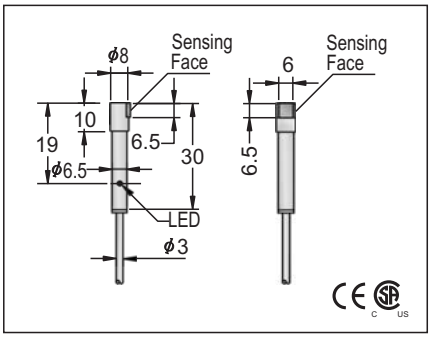

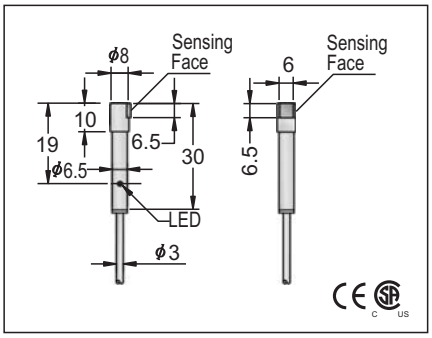

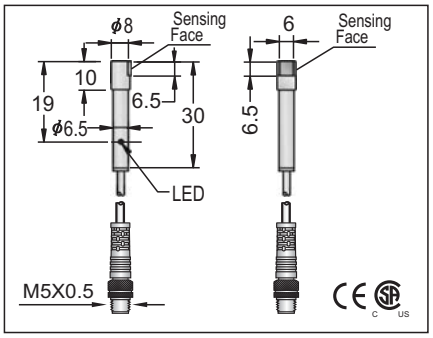

10-30VDC or 5-36VDC	6-12VDC	10-30VDC or 5-36VDC
<10%	<10%	<10%
<10mA	<1.1mA(OFF) or <2.2mA(ON)	<10mA
200mA	-	200mA
<0.01mA	-	<0.01mA
-	-	-
-	-	-
<1.5V(10-30V) or <1.0V(5-36V)	-	<1.5V(10-30V) or <1.0V(5-36V)
2KHZ	0.5KHZ	2KHZ
0.1ms/0.1ms	0.2ms/0.2ms	0.1ms/0.1ms
<15%(Sr)	<15%(Sr)	<15%(Sr)
<1.0%(Sr)	-	<1.0%(Sr)
IP67	IP67	IP67
-25℃ - +70℃	-25℃ - +70℃	-25℃ - +70℃
<10%(Sr)	<2%(Sr)	<10%(Sr)
YES	-	YES
220mA	-	220mA
<10ms	<10ms	<10ms
RFI>3V/m / EFT>1KV / ESD>4KV (contact)	RFI>3V/m / EFT>1KV / ESD>4KV (contact)	RFI>3V/m / EFT>1KV / ESD>4KV (contact)
IEC 60947-5-2,Part 7.4.1 / IEC 60947-5-2,Part 7.4.2	IEC 60947-5-2,Part 7.4.1 / IEC 60947-5-2,Part 7.4.2	IEC 60947-5-2,Part 7.4.1 / IEC 60947-5-2,Part 7.4.2
POM	POM	POM

FCU1-D0601N-A3U2T	1					FCU1-D0601N-A3U0.2T/P5	25	
FCU1-D0601N-B3U2T	2					FCU1-D0601N-B3U0.2T/P5	26	
FCU1-D0601P-A3U2T	3					FCU1-D0601P-A3U0.2T/P5	27	
FCU1-D0601P-B3U2T	4					FCU1-D0601P-B3U0.2T/P5	28	
			FCU1-D061.5NUT	21				
	1	ICU1-D061.5N-A3U2T					25	ICU1-D061.5N-A3U0.2T/P5
	2	ICU1-D061.5N-B3U2T					26	ICU1-D061.5N-B3U0.2T/P5
	3	ICU1-D061.5P-A3U2T					27	ICU1-D061.5P-A3U0.2T/P5
	4	ICU1-D061.5P-B3U2T					28	ICU1-D061.5P-B3U0.2T/P5

5-36v: ICU*-******-**** type switching distance Sn=1.5mm.		5-36v: ICU*-******-**** type switching distance Sn=1.5mm.
3 ϕ 3x0.15	3 ϕ 2x0.15	3 ϕ 3x0.15
Approx.38 g	Approx.26 g	Approx.38 g / Approx.39 g

SIDE SENSING DC INDUCTIVE PROXIMITY SWITCH

ϕ 6.5	
●	●
1.0mm	1.5mm
stainless steel	
●	

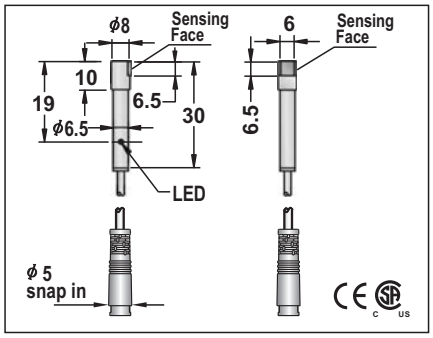

10-30VDC or 5-36VDC	
<10%	
<10mA	
200mA	
<0.01mA	
-	
-	
<1.5V(10-30V) or <1.0V(5-36V)	
2KHZ	
0.1ms/0.1ms	
<15%(Sr)	
<1.0%(Sr)	
IP67	
-25℃ - +70℃	
<10%(Sr)	
YES	
220mA	
<10ms	
RFI>3V/m / EFT>1KV / ESD>4KV (contact)	
IEC 60947-5-2,Part 7.4.1 / IEC 60947-5-2,Part 7.4.2	
POM	

FCU1-D0601N-A3U0.2T/SN5	25	
FCU1-D0601N-B3U0.2T/SN5	26	
FCU1-D0601P-A3U0.2T/SN5	27	
FCU1-D0601P-B3U0.2T/SN5	28	
	25	ICU1-D061.5N-A3U0.2T/SN5
	26	ICU1-D061.5N-B3U0.2T/SN5
	27	ICU1-D061.5P-A3U0.2T/SN5
	28	ICU1-D061.5P-B3U0.2T/SN5

5-36V: ICU*-******-**** type switching distance Sn=1.5mm.

3 ϕ 3x0.15	
Approx.38 g	Approx.39 g

ϕ 6.5	
●	●
1.0mm	1.5mm
stainless steel	
●	

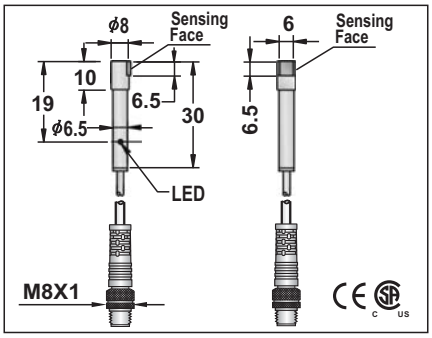

10-30VDC or 5-36VDC	
<10%	
<10mA	
200mA	
<0.01mA	
-	
-	
<1.5V(10-30V) or <1.0V(5-36V)	
2KHZ	
0.1ms/0.1ms	
<15%(Sr)	
<1.0%(Sr)	
IP67	
-25℃ - +70℃	
<10%(Sr)	
YES	
220mA	
<10ms	
RFI>3V/m / EFT>1KV / ESD>4KV (contact)	
IEC 60947-5-2,Part 7.4.1 / IEC 60947-5-2,Part 7.4.2	
POM	

FCU1-D0601N-A3U0.2T/P8	29	
FCU1-D0601N-B3U0.2T/P8	30	
FCU1-D0601P-A3U0.2T/P8	31	
FCU1-D0601P-B3U0.2T/P8	32	
	29	ICU1-D061.5N-A3U0.2T/P8
	30	ICU1-D061.5N-B3U0.2T/P8
	31	ICU1-D061.5P-A3U0.2T/P8
	32	ICU1-D061.5P-B3U0.2T/P8

5-36V: ICU*-******-**** type switching distance Sn=1.5mm.

3 ϕ 3x0.15	
Approx.38 g	Approx.39 g

ϕ 6.5	
●	●
1.0mm	1.5mm
stainless steel	
●	

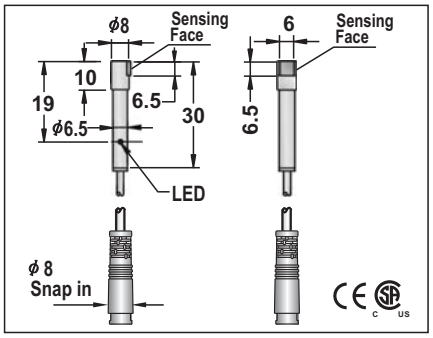

10-30VDC or 5-36VDC	
<10%	
<10mA	
200mA	
<0.01mA	
-	
-	
<1.5V(10-30V) or <1.0V(5-36V)	
2KHZ	
0.1ms/0.1ms	
<15%(Sr)	
<1.0%(Sr)	
IP67	
-25℃ - +70℃	
<10%(Sr)	
YES	
220mA	
<10ms	
RFI>3V/m / EFT>1KV / ESD>4KV (contact)	
IEC 60947-5-2,Part 7.4.1 / IEC 60947-5-2,Part 7.4.2	
POM	

FCU1-D0601N-A3U0.2T/SN8	29	
FCU1-D0601N-B3U0.2T/SN8	30	
FCU1-D0601P-A3U0.2T/SN8	31	
FCU1-D0601P-B3U0.2T/SN8	32	
	29	ICU1-D061.5N-A3U0.2T/SN8
	30	ICU1-D061.5N-B3U0.2T/SN8
	31	ICU1-D061.5P-A3U0.2T/SN8
	32	ICU1-D061.5P-B3U0.2T/SN8

5-36V: ICU*-******-**** type switching distance Sn=1.5mm.

3 ϕ 3x0.15	
Approx.38 g	Approx.39 g

SIDE SENSING DC INDUCTIVE PROXIMITY SWITCH

ϕ6.5		
●	●	
1.0mm	1.5mm	
stainless steel only		
●		
10-30VDC or 5-36VDC		
<10%		
<10mA		
200mA		
<0.01mA		
-		
-		
<1.5(10-30V) or <1.0V(5-36V)		
2KHZ		
0.1ms/0.1ms		
<15%(Sr)		
<1.0%(Sr)		
IP67		
-25℃ - +70℃		
<10%(Sr)		
YES		
220mA		
<10ms		
RFI>3V/m / EFT>1KV / ESD>4KV (contact)		
IEC 60947-5-2,Part 7.4.1 / IEC 60947-5-2,Part 7.4.2		
POM		
FCU1-D0601N-ACU3T	29	
FCU1-D0601N-BCU3T	29	
FCU1-D0601P-ACU3T	30	
FCU1-D0601P-BCU3T	30	
	29	ICU1-D061.5N-ACU3T
	29	ICU1-D061.5N-BCU3T
	30	ICU1-D061.5P-ACU3T
	30	ICU1-D061.5P-BCU3T
5-36V: ICU*-******-**** type switching distance Sn=1.5mm.		
Approx.15 g		

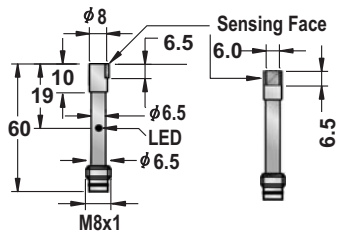

ϕ6.5		
●		
1.0mm	1.5mm	
stainless steel only		
●		
10-30VDC or 5-36VDC		
<10%		
<10mA		
200mA		
<0.01mA		
-		
-		
<1.5(10-30V) or <1.0V(5-36V)		
2KHZ		
0.1ms/0.1ms		
<15%(Sr)		
<1.0%(Sr)		
IP67		
-25℃ - +70℃		
<10%(Sr)		
YES		
220mA		
<10ms		
RFI>3V/m / EFT>1KV / ESD>4KV (contact)		
IEC 60947-5-2,Part 7.4.1 / IEC 60947-5-2,Part 7.4.2		
POM		
FCU1-D0601N-ARU3T	29	
FCU1-D0601N-BRU3T	29	
FCU1-D0601P-ARU3T	30	
FCU1-D0601P-BRU3T	30	
	29	ICU1-D061.5N-ARU3T
	29	ICU1-D061.5N-BRU3T
	30	ICU1-D061.5P-ARU3T
	30	ICU1-D061.5P-BRU3T
5-36V: ICU*-******-**** type switching distance Sn=1.5mm.		
Approx.28 g		

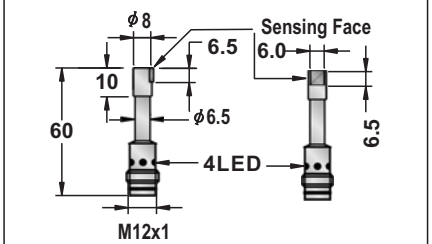
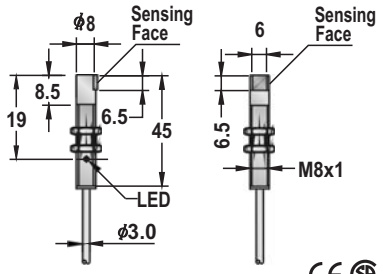
M 8		
●	●	
1.0mm	1.5mm	
stainless steel		
●		
10-30VDC or 5-36VDC		
<10%		
<10mA		
200mA		
<0.01mA		
-		
-		
<1.5V(10-30V) or <1.0V(5-36V)		
2KHZ		
0.1ms/0.1ms		
<15%(Sr)		
<1.0%(Sr)		
IP67		
-25℃ - +70℃		
<10%(Sr)		
YES		
220mA		
<10ms		
RFI>3V/m / EFT>1KV / ESD>4KV (contact)		
IEC 60947-5-2,Part 7.4.1 / IEC 60947-5-2,Part 7.4.2		
POM		
FCU1-0801N-A3U2T	1	
FCU1-0801N-B3U2T	2	
FCU1-0801P-A3U2T	3	
FCU1-0801P-B3U2T	4	
FCU1-0801NUT	21	FCU1-081.5NUT
	1	ICU1-081.5N-A3U2T
	2	ICU1-081.5N-B3U2T
	3	ICU1-081.5P-A3U2T
	4	ICU1-081.5P-B3U2T
5-36V: ICU*-******-**** type switching distance Sn=1.5mm.		
3 ϕ 2x0.15		
Approx.40 g