DC INDUCTIVE PROXIMITY SWITCH SQUARE CONNECTOR TYPE

Q 14	Q 14	Q16x28x10	
●	●	●	○
10 mm	10 mm	1 mm	2 mm
PBT RESIN	PBT RESIN	PBT RESIN	
●	●	●	
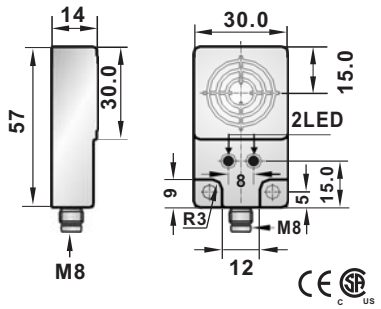	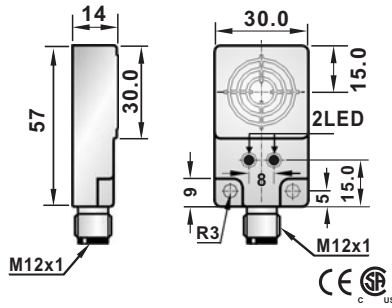	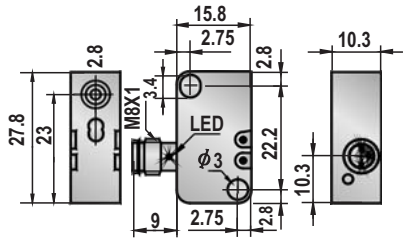	
10-30VDC	10-30VDC	10-30VDC	
<10%	<10%	<10%	
<10mA	<10mA	<10mA	
200mA	200mA	200mA	
<0.01mA	<0.01mA	<0.01mA	
-	-	-	
-	-	-	
<1.5V	<1.5V	<1.5V	
500HZ	500HZ	2KHZ	
0.5ms/0.5ms	0.5ms/0.5ms	0.1ms/0.1ms	
<15%(Sr)	<15%(Sr)	<15%(Sr)	
<1.0%(Sr)	<1.0%(Sr)	<1.0%(Sr)	
IP67	IP67	IP67	
-25 °C - +70 °C	-25 °C - +70 °C	-25 °C - +75 °C	
<10%(Sr)	<10%(Sr)	<10%(Sr)	
YES	YES	YES	
220mA	220mA	220mA	
<10ms	<10ms	<10ms	
RFI>3V/m / EFT>1KV / ESD>4KV (contact)	RFI>3V/m / EFT>1KV / ESD>4KV (contact)	RFI>3V/m / EFT>1KV / ESD>4KV (contact)	
IEC 60947-5-2,Part 7.4.1 / IEC 60947-5-2,Part 7.4.2	IEC 60947-5-2,Part 7.4.1 / IEC 60947-5-2,Part 7.4.2	IEC 60947-5-2,Part 7.4.1 / IEC 60947-5-2,Part 7.4.2	
PBT	PBT	PBT	
		FQP1-Q2801N-ACU3X	29	FQP2-Q2802N-ACU3X
		FQP1-Q2801N-BCU3X	29	FQP2-Q2802N-BCU3X
		FQP1-Q2801P-ACU3X	30	FQP2-Q2802P-ACU3X
		FQP1-Q2801P-BCU3X	30	FQP2-Q2802P-BCU3X
	Please see Page 18 for details and specifications of DC 2-Wire models on this page.		
4φ3x0.15	4φ3x0.15		
Approx.70 g	Approx.80 g	Approx.30 g	

DC INDUCTIVE PROXIMITY SWITCH SQUARE CONNECTOR TYPE

Q16x28x10		Q 42	Q25s
●	○	●	●
1 mm	2 mm	20 mm	10 mm
PBT RESIN		ABS RESIN	PBT RESIN
●		●	●

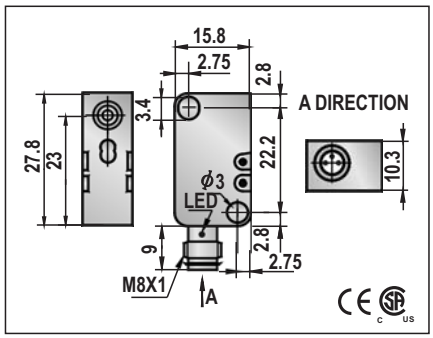

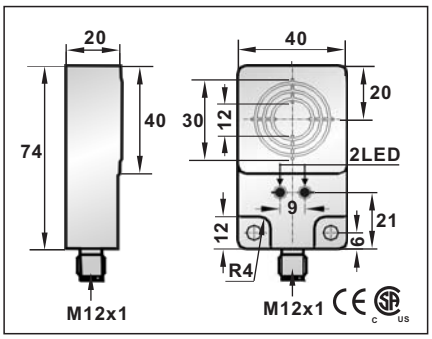

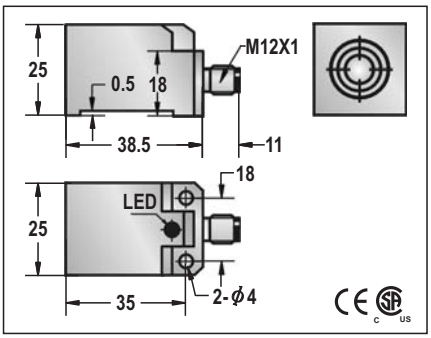

10-30VDC	10-30VDC	10-30VDC or 10-55VDC
<10%	<10%	<10%
<10mA	<10mA	<10mA or <20mA
200mA	200mA	200mA
<0.01mA	<0.01mA	<0.01mA
-	-	-
-	-	-
<1.5V	<1.5V	<1.5V or <2.0V
2KHZ	500HZ	300HZ
0.1ms/0.1ms	0.5ms/0.5ms	0.5ms/0.5ms
<15%(Sr)	<15%(Sr)	<15%(Sr)
<1.0%(Sr)	<1.0%(Sr)	<1.0%(Sr)
IP67	IP67	IP67
-25℃ - +75℃	-25℃ - +70℃	-25℃ - +75℃
<10%(Sr)	<10%(Sr)	<10%(Sr)
YES	YES	YES
220mA	220mA	220mA
<10ms	<10ms	<10ms
RFI>3V/m / EFT>1KV / ESD>4KV (contact)	RFI>3V/m / EFT>1KV / ESD>4KV (contact)	RFI>3V/m / EFT>1KV / ESD>4KV (contact)
IEC 60947-5-2,Part 7.4.1 / IEC 60947-5-2,Part 7.4.2	IEC 60947-5-2,Part 7.4.1 / IEC 60947-5-2,Part 7.4.2	IEC 60947-5-2,Part 7.4.1 / IEC 60947-5-2,Part 7.4.2
PBT	POM	PBT

FQP1-2801N-ACU3	29	FQP2-2802N-ACU3			FQP1-2510N-ARS4F	33
FQP1-2801N-BCU3	29	FQP2-2802N-BCU3			FQP1-2510N-BRS4F	34
FQP1-2801P-ACU3	30	FQP2-2802P-ACU3			FQP1-2510P-ARS4F	35
FQP1-2801P-BCU3	30	FQP2-2802P-BCU3			FQP1-2510P-BRS4F	36

	Please see Page 18 for details and specifications of DC 2-Wire models on this page.	1. Voltage Drop:<1.5V(10-30V),<2V(10-55V). 2. 10-55V type: No Load Current < 20mA.
Approx.30 g	Approx.110 g	Approx.80 g

DC INDUCTIVE PROXIMITY SWITCH SQUARE CONNECTOR TYPE

Q25s	Q25	Q25
●	●	●
10 mm	10 mm	10 mm
PBT RESIN	PBT RESIN	PBT RESIN
●	●	●
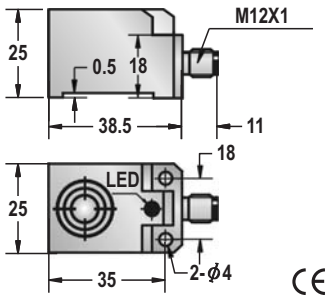	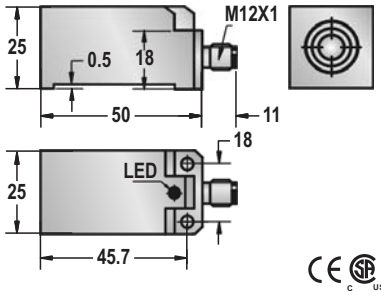	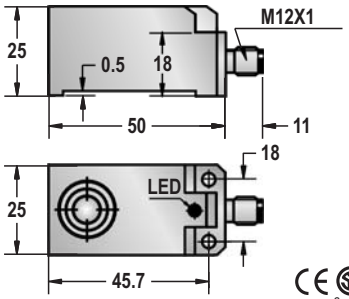
10-30VDC or 10-55VDC	10-30VDC or 10-55VDC	10-30VDC or 10-55VDC
<10%	<10%	<10%
<10mA or <20mA	<10mA or <20mA	<10mA or <20mA
200mA	200mA	200mA
<0.01mA	<0.01mA	<0.01mA
-	-	-
-	-	-
<1.5V or <2.0V	<1.5V or <2.0V	<1.5V or <2.0V
300HZ	300HZ	300HZ
0.5ms/0.5ms	0.5ms/0.5ms	0.5ms/0.5ms
<15%(Sr)	<15%(Sr)	<15%(Sr)
<1.0%(Sr)	<1.0%(Sr)	<1.0%(Sr)
IP67	IP67	IP67
-25°C - +75°C	-25°C - +70°C	-25°C - +75°C
<10%(Sr)	<10%(Sr)	<10%(Sr)
YES	YES	YES
220mA	220mA	220mA
<10ms	<10ms	<10ms
RFI>3V/m / EFT>1KV / ESD>4KV (contact)	RFI>3V/m / EFT>1KV / ESD>4KV (contact)	RFI>3V/m / EFT>1KV / ESD>4KV (contact)
IEC 60947-5-2,Part 7.4.1 / IEC 60947-5-2,Part 7.4.2	IEC 60947-5-2,Part 7.4.1 / IEC 60947-5-2,Part 7.4.2	IEC 60947-5-2,Part 7.4.1 / IEC 60947-5-2,Part 7.4.2
PBT	PBT	PBT
FQP1-2510N-ARS4T 33	FQP1-2510N-ARU4F 33	
FQP1-2510N-BRS4T 34	FQP1-2510N-BRU4F 34	
FQP1-2510P-ARS4T 35	FQP1-2510P-ARU4F 35	
FQP1-2510P-BRS4T 36	FQP1-2510P-BRU4F 36	
	FQP1-2510C-ARU4F 40	FQP1-2510C-ARU4T 40
	FQP1-2510C-BRU4F 78	FQP1-2510C-BRU4T 78
1. Voltage Drop:<1.5V(10-30V),<2V(10-55V). 2. 10-55V type: No Load Current < 20mA.	Please see Page 18 for details and specifications of DC 2-Wire models	
Approx.80 g	Approx.90 g	Approx.90 g

DC INDUCTIVE PROXIMITY SWITCH SQUARE CONNECTOR TYPE

Q40			Q30x45x12			Q40x50x17		
●	○		●	○		●	○	
15 mm	30 mm		10 mm	15 mm		15 mm	30 mm	
PBT RESIN			PBT RESIN			PBT RESIN		
●			●			●		
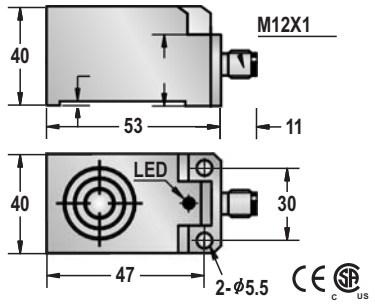			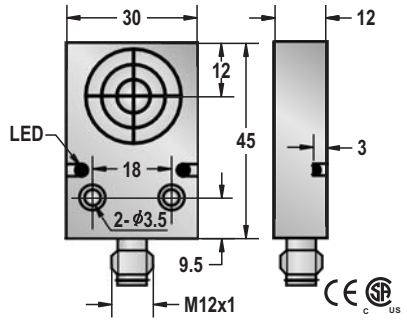			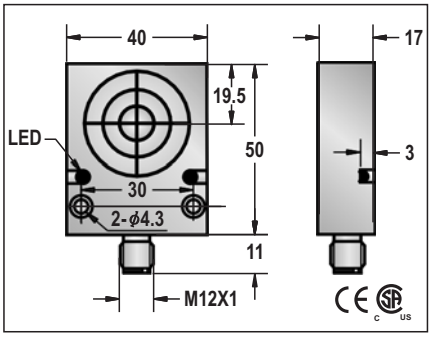		
10-30VDC or 10-55VDC			10-30VDC or 10-55VDC			10-30VDC or 10-55VDC		
<10%			<10%			<10%		
<10mA or <20mA			<10mA or <20mA			<10mA or <20mA		
200mA			200mA			200mA		
<0.01mA			<0.01mA			<0.01mA		
-			-			-		
-			-			-		
<1.5V or <2.0V			<1.5V or <2.0V			<1.5V or <2.0V		
100HZ			100HZ			100HZ		
1ms/1ms			1ms/1ms			1ms/1ms		
<15%(Sr)			<15%(Sr)			<15%(Sr)		
<1.0%(Sr)			<1.0%(Sr)			<1.0%(Sr)		
IP67			IP67			IP67		
-25 °C - +70 °C			-25 °C - +70 °C			-25 °C - +70 °C		
<10%(Sr)			<10%(Sr)			<10%(Sr)		
YES			YES			YES		
220mA			220mA			220mA		
<10ms			<10ms			<10ms		
RFI>3V/m / EFT>1KV / ESD>4KV (contact)			RFI>3V/m / EFT>1KV / ESD>4KV (contact)			RFI>3V/m / EFT>1KV / ESD>4KV (contact)		
IEC 60947-5-2,Part 7.4.1 / IEC 60947-5-2,Part 7.4.2			IEC 60947-5-2,Part 7.4.1 / IEC 60947-5-2,Part 7.4.2			IEC 60947-5-2,Part 7.4.1 / IEC 60947-5-2,Part 7.4.2		
PBT			PBT			PBT		
FQP1-4515N-ARU4T	33	FQP2-4530N-ARU4T	FQP1-3110N-ARU4T	33	FQP2-3115N-ARU4T	FQP1-4115N-ARU4T	33	FQP2-4130N-ARU4T
FQP1-4515N-BRU4T	34	FQP2-4530N-BRU4T	FQP1-3110N-BRU4T	34	FQP2-3115N-BRU4T	FQP1-4115N-BRU4T	34	FQP2-4130N-BRU4T
FQP1-4515P-ARU4T	35	FQP2-4530P-ARU4T	FQP1-3110P-ARU4T	35	FQP2-3115P-ARU4T	FQP1-4115P-ARU4T	35	FQP2-4130P-ARU4T
FQP1-4515P-BRU4T	36	FQP2-4530P-BRU4T	FQP1-3110P-BRU4T	36	FQP2-3115P-BRU4T	FQP1-4115P-BRU4T	36	FQP2-4130P-BRU4T
1. Voltage Drop:<1.5V(10-30V),<2V(10-55V). 2. 10-55V type: No Load Current < 20mA.			Please see Page 18 for details and specifications of DC 2-Wire models on this page.					
Approx.155 g			Approx.65 g			Approx.85 g		

DC INDUCTIVE PROXIMITY SWITCH SQUARE CONNECTOR TYPE

Q35x55x15		Q18C	Q50s
●	○	○	○
10 mm	15 mm	4 mm	20 mm
PBT RESIN		POM RESIN	PBT
●		●	●
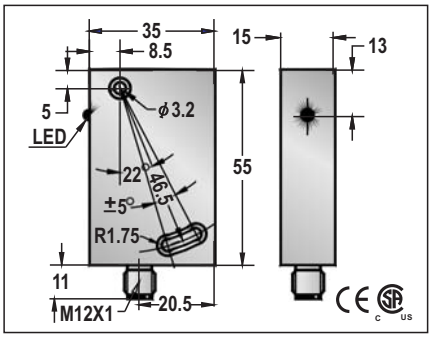		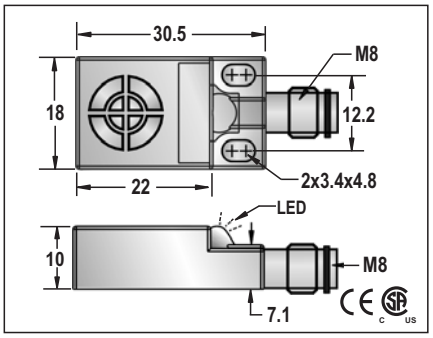	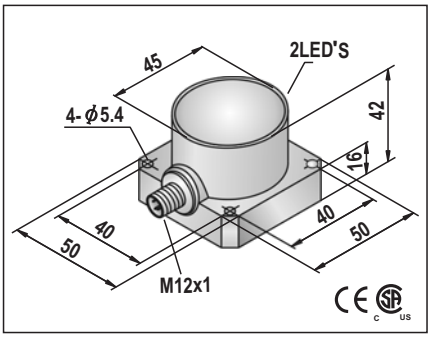
10-30VDC or 10-55VDC		10-30VDC	10-30VDC or 10-55VDC
<10%		<10%	<10%
<10mA or <20mA		<10mA	<10mA or <20mA
200mA		200mA	200mA
<0.01mA		<0.01mA	<0.01mA
-		-	-
-		-	-
<1.5V or <2.0V		<1.5V	<1.5V or <2.0V
100HZ		500HZ	30HZ
1ms/1ms		0.5ms/0.5ms	2ms/2ms
<15%(Sr)		<15%(Sr)	<15%(Sr)
<1.0%(Sr)		<1.0%(Sr)	<1.0%(Sr)
IP67		IP67	IP67
-25 °C - +70 °C		-25 °C - +70 °C	-25 °C - +70 °C
<10%(Sr)		<10%(Sr)	<10%(Sr)
YES		YES	YES
220mA		220mA	220mA
<10ms		<10ms	<10ms
RFI>3V/m / EFT>1KV / ESD>4KV (contact)		RFI>3V/m / EFT>1KV / ESD>4KV (contact)	RFI>3V/m / EFT>1KV / ESD>4KV (contact)
IEC 60947-5-2,Part 7.4.1 / IEC 60947-5-2,Part 7.4.2		IEC 60947-5-2,Part 7.4.1 / IEC 60947-5-2,Part 7.4.2	IEC 60947-5-2,Part 7.4.1 / IEC 60947-5-2,Part 7.4.2
PBT		POM	PBT
		FQP2-18C04N-ACU3T 29	FQP2-5020N-ARS4T 33
		FQP2-18C04N-BCU3T 29	FQP2-5020N-BRS4T 34
		FQP2-18C04P-ACU3T 30	FQP2-5020P-ARS4T 35
		FQP2-18C04P-BCU3T 30	FQP2-5020P-BRS4T 36
Sensing face 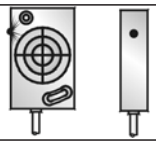		Please see Page 18 for details and specifications of DC 2-Wire models on this page.	1. Voltage Drop:<1.5V(10-30V),<1V(5-36V), <2V(10-55V). 2. 10-55V type: No Load Current < 20mA.
Approx.75 g		Approx.21 g	

DC INDUCTIVE PROXIMITY SWITCH SQUARE CONNECTOR TYPE

Q60s	Q80	
○	● ○	
30 mm	40 mm / 50 mm	
PBT RESIN	PBT RESIN	
●	●	

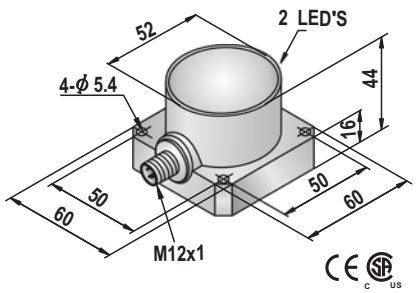

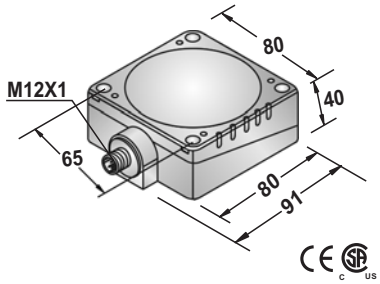

10-30VDC or 10-55VDC		10-30VDC or 10-55VDC	
<10%		<10%	
<10mA or <20mA		<10mA or <20mA	
200mA		200mA	
<0.01mA		<0.01mA	
-		-	
-		-	
<1.5V or <2.0V		<1.5V or <2.0V	
30HZ		100HZ	
2ms/2ms		1ms/1ms	
<15%(Sr)		<15%(Sr)	
<1.0%(Sr)		<1.0%(Sr)	
IP67		IP67	
-25 °C - +70 °C		-25 °C - +70 °C	
<10%(Sr)		<10%(Sr)	
YES		YES	
220mA		220mA	
<10ms		<10ms	
RFI>3V/m / EFT>1KV / ESD>4KV (contact)		RFI>3V/m / EFT>1KV / ESD>4KV (contact)	
IEC 60947-5-2,Part 7.4.1 / IEC 60947-5-2,Part 7.4.2		IEC 60947-5-2,Part 7.4.1 / IEC 60947-5-2,Part 7.4.2	
PBT		PBT	

FQP2-6030N-ARS4T	33	FQP1-8040N-ARU4T	33	FQP2-8050N-ARU4T
FQP2-6030N-BRS4T	34	FQP1-8040N-BRU4T	34	FQP2-8050N-BRU4T
FQP2-6030P-ARS4T	35	FQP1-8040P-ARU4T	35	FQP2-8050P-ARU4T
FQP2-6030P-BRS4T	36	FQP1-8040P-B4URT	36	FQP2-8050P-BRU4T
		FQP1-8040P-SRU4T	38	FQP2-8050P-SRU4T
		FQP1-8040N-SRU4T	37	FQP2-8050N-SRU4T

1. Voltage Drop:<1.5V(10-30V),<2V(10-55V). 2. 10-55V type: No Load Current < 20mA.	Please see Page 18 for details and specifications of DC 2-Wire models on this page.	
Approx.75 g	Approx.110 g	