DC INDUCTIVE PROXIMITY SWITCH 5 WAY ROTATABLE SENSING HEAD TYPE

Q40	Q40	Q40
●	○	○
15 mm	20 mm	30 mm
PBT RESIN	PBT RESIN	PBT RESIN
●	●	●

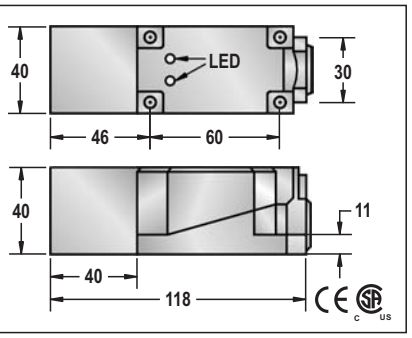

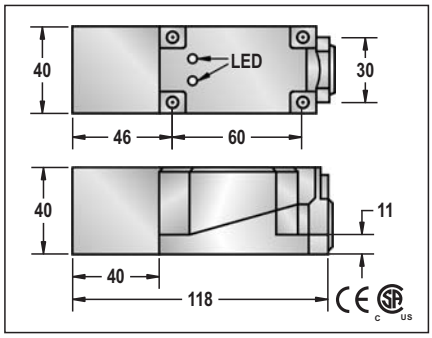

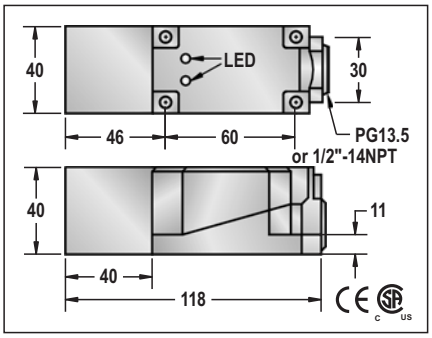

10-30VDC or 10-55VDC	10-30VDC or 10-55VDC	10-30VDC or 10-55VDC
<10%	<10%	<10%
<10mA or <20mA	<10mA or <20mA	<10mA or <20mA
200mA	200mA	200mA
<0.01mA	<0.01mA	<0.01mA
-	-	-
-	-	-
<1.5V or <2.0V	<1.5V or <2.0V	<1.5V or <2.0V
100HZ	100HZ	100HZ
1ms/1ms	1ms/1ms	1ms/1ms
<15%(Sr)	<15%(Sr)	<15%(Sr)
<1.0%(Sr)	<1.0%(Sr)	<1.0%(Sr)
IP67	IP67	IP67
-25 °C - +75 °C	-25 °C - +75 °C	-25 °C - +75 °C
<10%(Sr)	<10%(Sr)	<10%(Sr)
YES	YES	YES
220mA	220mA	220mA
<10ms	<10ms	<10ms
RFI>3V/m / EFT>1KV / ESD>4KV (contact)	RFI>3V/m / EFT>1KV / ESD>4KV (contact)	RFI>3V/m / EFT>1KV / ESD>4KV (contact)
IEC 60947-5-2,Part 7.4.1 / IEC 60947-5-2,Part 7.4.2	IEC 60947-5-2,Part 7.4.1 / IEC 60947-5-2,Part 7.4.2	IEC 60947-5-2,Part 7.4.1 / IEC 60947-5-2,Part 7.4.2
PBT	PBT	PBT

FQP1-4015N-A3U	1	FQP2-4020N-A3U	1	FQP2-4030N-A3U	1
FQP1-4015N-B3U	2	FQP2-4020N-B3U	2	FQP2-4030N-B3U	2
FQP1-4015P-A3U	3	FQP2-4020P-A3U	3	FQP2-4030P-A3U	3
FQP1-4015P-B3U	4	FQP2-4020P-B3U	4	FQP2-4030P-B3U	4
FQP1-4015P-S4U	6	FQP2-4020P-S4U	6	FQP2-4030P-S4U	6
FQP1-4015N-S4U	5	FQP2-4020N-S4U	5	FQP2-4030N-S4U	5
FQP1-4015C-A2U	7	FQP2-4020C-A2U	7	FQP2-4030C-A2U	7
FQP1-4015C-B2U	8	FQP2-4020C-B2U	8	FQP2-4030C-B2U	8
HQP1-4015N-A3U	1	HQP2-4020N-A3U	1	HQP2-4030N-A3U	1
HQP1-4015N-B3U	2	HQP2-4020N-B3U	2	HQP2-4030N-B3U	2
HQP1-4015P-A3U	3	HQP2-4020P-A3U	3	HQP2-4030P-A3U	3
HQP1-4015P-B3U	4	HQP2-4020P-B3U	4	HQP2-4030P-B3U	4

1. Voltage Drop:<1.5V(10-30V),<2V(10-55V). 2. 10-55V type: No Load Current < 20mA.	Please see Page 18 for details and specifications of DC 2-Wire models on this page.	
Approx.242 g	Approx.242 g	Approx.242 g

DC INDUCTIVE PROXIMITY SWITCH 5 WAY ROTATABLE SENSING HEAD TYPE

Q50	Q40	Q40
○	●	○
40 mm	15 mm	20 mm
PBT RESIN	PBT RESIN	PBT RESIN
●	●	●
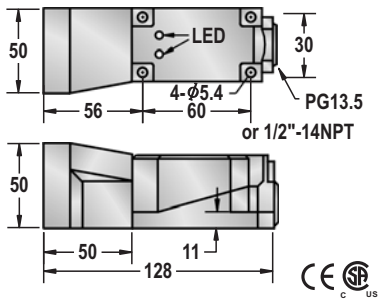	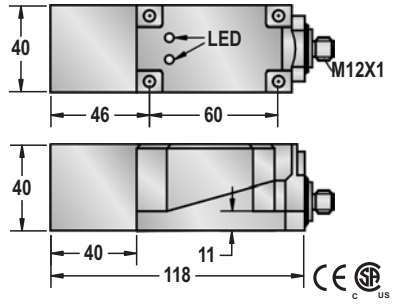	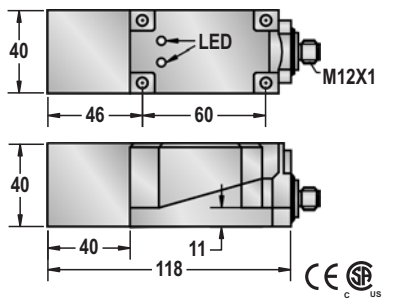
10-30VDC or 10-55VDC	10-30VDC or 10-55VDC	10-30VDC or 10-55VDC
<10%	<10%	<10%
<10mA or <20mA	<10mA or <20mA	<10mA or <20mA
200mA	200mA	200mA
<0.01mA	<0.01mA	<0.01mA
-	-	-
-	-	-
<1.5V or <2.0V	<1.5V or <2.0V	<1.5V or <2.0V
100HZ	100HZ	100HZ
1ms/1ms	1ms/1ms	1ms/1ms
<15%(Sr)	<15%(Sr)	<15%(Sr)
<1.0%(Sr)	<1.0%(Sr)	<1.0%(Sr)
IP67	IP67	IP67
-25 °C - +70 °C	-25 °C - +70 °C	-25 °C - +70 °C
<10%(Sr)	<10%(Sr)	<10%(Sr)
YES	YES	YES
220mA	220mA	220mA
<10ms	<10ms	<10ms
RFI>3V/m / EFT>1KV / ESD>4KV (contact)	RFI>3V/m / EFT>1KV / ESD>4KV (contact)	RFI>3V/m / EFT>1KV / ESD>4KV (contact)
IEC 60947-5-2,Part 7.4.1 / IEC 60947-5-2,Part 7.4.2	IEC 60947-5-2,Part 7.4.1 / IEC 60947-5-2,Part 7.4.2	IEC 60947-5-2,Part 7.4.1 / IEC 60947-5-2,Part 7.4.2
PBT	PBT	PBT
FQP2-5040N-A3U 1	FQP1-4015N-ARU4 33	FQP2-4020N-ARU4 33
FQP2-5040N-B3U 2	FQP1-4015N-BRU4 34	FQP2-4020N-BRU4 34
FQP2-5040P-A3U 3	FQP1-4015P-ARU4 35	FQP2-4020P-ARU4 35
FQP2-5040P-B3U 4	FQP1-4015P-BRU4 36	FQP2-4020P-BRU4 36
FQP2-5040P-S4U 6	FQP1-4015P-SRU4 38	FQP2-4020P-SRU4 38
FQP2-5040N-S4U 5	FQP1-4015N-SRU4 37	FQP2-4020N-SRU4 37
HQP2-5040N-A3U 1	HQP1-4015N-ARU4 33	HQP2-4020N-ARU4 33
HQP2-5040N-B3U 2	HQP1-4015N-BRU4 34	HQP2-4020N-BRU4 34
HQP2-5040P-A3U 3	HQP1-4015P-ARU4 35	HQP2-4020P-ARU4 35
HQP2-5040P-B3U 4	HQP1-4015P-BRU4 36	HQP2-4020P-BRU4 36
1. Voltage Drop:<1.5V(10-30V),<2V(10-55V). 2. 10-55V type: No Load Current < 20mA.	Please see Page 18 for details and specifications of DC 2-Wire models on this page.	
Approx.450 g	Approx.250 g	Approx.450 g

DC INDUCTIVE PROXIMITY SWITCH 5 WAY ROTATABLE SENSING HEAD TYPE

Q40	Q50	Q40s
○	○	●
30 mm	40 mm	15 mm
PBT RESIN	PBT RESIN	PBT RESIN
●	●	●
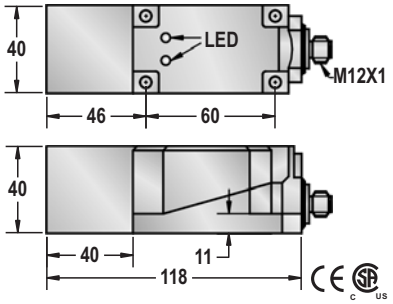	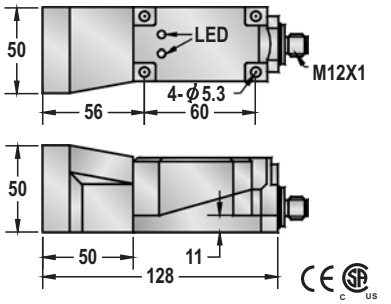	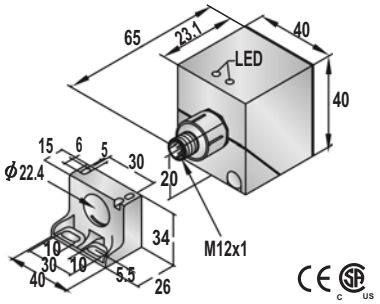
10-30VDC or 10-55VDC	10-30VDC or 10-55VDC	10-30VDC or 10-55VDC
<10%	<10%	<10%
<10mA or <20mA	<10mA or <20mA	<10mA or <20mA
200mA	200mA	200mA
<0.01mA	<0.01mA	<0.01mA
-	-	-
-	-	-
<1.5V or <2.0V	<1.5V or <2.0V	<1.5V or <2.0V
100HZ	100HZ	100HZ
1ms/1ms	1ms/1ms	1ms/1ms
<15%(Sr)	<15%(Sr)	<15%(Sr)
<1.0%(Sr)	<1.0%(Sr)	<1.0%(Sr)
IP67	IP67	IP67
-25°C - +70°C	-25°C - +70°C	-25°C - +70°C
<10%(Sr)	<10%(Sr)	<10%(Sr)
YES	YES	YES
220mA	220mA	220mA
<10ms	<10ms	<10ms
RFI>3V/m / EFT>1KV / ESD>4KV (contact)	RFI>3V/m / EFT>1KV / ESD>4KV (contact)	RFI>3V/m / EFT>1KV / ESD>4KV (contact)
IEC 60947-5-2,Part 7.4.1 / IEC 60947-5-2,Part 7.4.2	IEC 60947-5-2,Part 7.4.1 / IEC 60947-5-2,Part 7.4.2	IEC 60947-5-2,Part 7.4.1 / IEC 60947-5-2,Part 7.4.2
PBT	PBT	PBT

FQP2-4030N-ARU4	33	FQP2-5040N-ARU4	33	FQP1-4015N-ARS4	33
FQP2-4030N-BRU4	34	FQP2-5040N-BRU4	34	FQP1-4015N-BRS4	34
FQP2-4030P-ARU4	35	FQP2-5040P-ARU4	35	FQP1-4015P-ARS4	35
FQP2-4030P-BRU4	36	FQP2-5040P-BRU4	36	FQP1-4015P-BRS4	36
FQP2-4030P-SRU4	38	FQP2-5040P-SRU4	38	FQP1-4015P-SRS4	38
FQP2-4030N-SRU4	37	FQP2-5040N-SRU4	37	FQP1-4015N-SRS4	37
HQP2-4030N-ARU4	33	HQP2-5040N-ARU4	33	HQP1-4015N-ARS4	33
HQP2-4030N-BRU4	34	HQP2-5040N-BRU4	34	HQP1-4015N-BRS4	34
HQP2-4030P-ARU4	35	HQP2-5040P-ARU4	35	HQP1-4015P-ARS4	35
HQP2-4030P-BRU4	36	HQP2-5040P-BRU4	36	HQP1-4015P-BRS4	36

1. Voltage Drop:<1.5V(10-30V),<2V(10-55V). 2. 10-55V type: No Load Current < 20mA.	Please see Page 18 for details and specifications of DC 2-Wire models on this page.	
Approx.250 g	Approx.450 g	Approx.450 g