AC INDUCTIVE PLASTIC HOUSING PROXIMITY SWITCH

M 12			M 12			M 12		
●	○		●	○		●	○	
2 mm	4 mm		2 mm	4 mm		2 mm	4 mm	
PBT RESIN			PBT RESIN			PBT RESIN		
●			●			●		
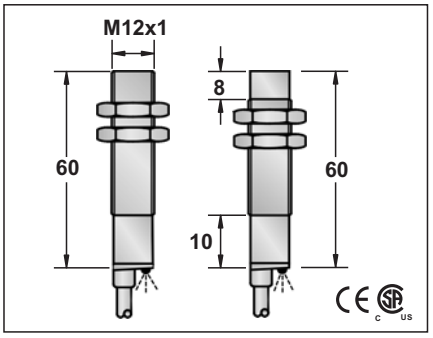			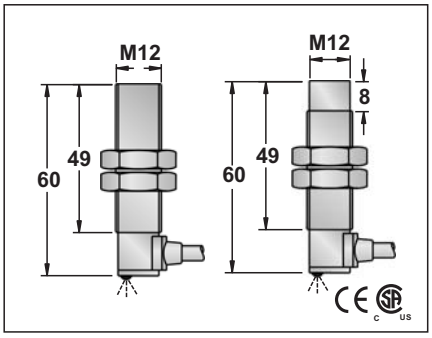			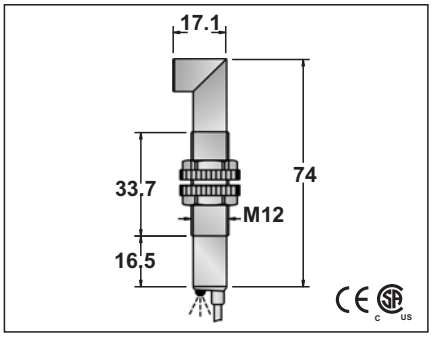		
20-250VAC			20-250VAC			20-250VAC		
-			-			-		
<1.8mA			<1.8mA			<1.8mA		
400mA			400mA			400mA		
<1.8mA			<1.8mA			<1.8mA		
5A(20ms)			5A(20ms)			5A(20ms)		
5mA			5mA			5mA		
<8VAC at 400mA			<8VAC at 400MA			<8VAC at 400MA		
<25HZ			<25HZ			<25HZ		
10ms/10ms			10ms/10ms			10ms/10ms		
<15%(Sr)			<15%(Sr)			<15%(Sr)		
<1.0%(Sr)			<1.0%(Sr)			<1.0%(Sr)		
IP67			IP67			IP67		
-25 °C - +70 °C			-25 °C - +70 °C			-25 °C - +70 °C		
<10%(Sr)			<10%(Sr)			<10%(Sr)		
NO			NO			NO		
-			-			-		
-			-			-		
RFI>3V/m / EFT>1KV / ESD>4KV (contact)			RFI>3V/m / EFT>1KV / ESD>4KV (contact)			RFI>3V/m / EFT>1KV / ESD>4KV (contact)		
IEC 60947-5-2,Part 7.4.1 / IEC 60947-5-2,Part 7.4.2			IEC 60947-5-2,Part 7.4.1 / IEC 60947-5-2,Part 7.4.2			IEC 60947-5-2,Part 7.4.1 / IEC 60947-5-2,Part 7.4.2		
POM		PBT	POM		PBT	POM		
FCP1-1202A-A2L2	9	FCP2-1204A-A2L2	FCP1-1202A-A2L2Y	9	FCP2-1204A-A2L2Y	FCP1-1202A-A2L2Z	9	FCP2-1204A-A2L2Z
FCP1-1202A-B2L2	10	FCP2-1204A-B2L2	FCP1-1202A-B2L2Y	10	FCP2-1204A-B2L2Y	FCP1-1202A-B2L2Z	10	FCP2-1204A-B2L2Z
4ϕ2x0.34			4ϕ2x0.34			4ϕ2x0.34		
Approx.68 g			Approx.68 g			Approx.77 g		

AC INDUCTIVE PLASTIC HOUSING PROXIMITY SWITCH

M 18			M 18			M 18		
●	○		●	○		●	○	
5 mm	8 mm		5 mm	8 mm		5 mm	8 mm	
PBT RESIN			PBT RESIN			PBT RESIN		
●			●			●		
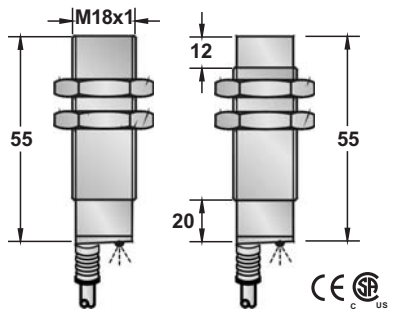			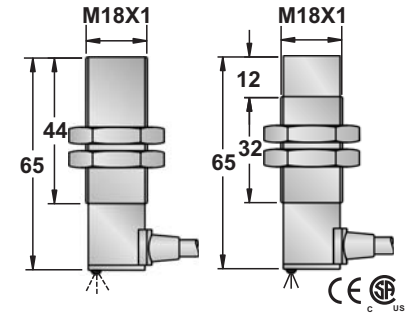			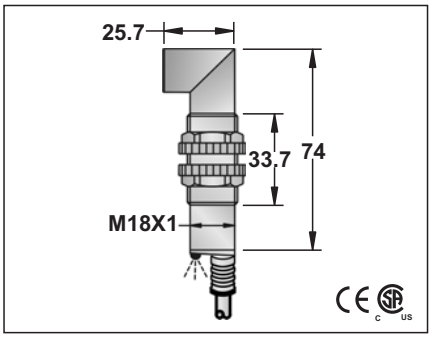		
20-250VAC			20-250VAC			20-250VAC		
-			-			-		
<1.8mA			<1.8mA			<1.8mA		
400mA			400mA			400mA		
<1.8mA			<1.8mA			<1.8mA		
5A(20ms)			5A(20ms)			5A(20ms)		
5mA			5mA			5mA		
<8VAC at 400mA			<8VAC at 400mA			<8VAC at 400mA		
<25HZ			<25HZ			<25HZ		
10ms/10ms			10ms/10ms			10ms/10ms		
<15%(Sr)			<15%(Sr)			<15%(Sr)		
<1.0%(Sr)			<1.0%(Sr)			<1.0%(Sr)		
IP67			IP67			IP67		
-25 °C - +70 °C			-25 °C - +70 °C			-25 °C - +70 °C		
<10%(Sr)			<10%(Sr)			<10%(Sr)		
NO			NO			NO		
-			-			-		
-			-			-		
RFI>3V/m / EFT>1KV / ESD>4KV (contact)			RFI>3V/m / EFT>1KV / ESD>4KV (contact)			RFI>3V/m / EFT>1KV / ESD>4KV (contact)		
IEC 60947-5-2,Part 7.4.1 / IEC 60947-5-2,Part 7.4.2			IEC 60947-5-2,Part 7.4.1 / IEC 60947-5-2,Part 7.4.2			IEC 60947-5-2,Part 7.4.1 / IEC 60947-5-2,Part 7.4.2		
PBT			PBT			PBT		
FCP1-1805A-A2L2	9	FCP2-1808A-A2L2	FCP1-1805A-A2L2Y	9	FCP2-1808A-A2L2Y	FCP1-1805A-A2L2Z	11	FCP2-1808A-A2L2Z
FCP1-1805A-B2L2	10	FCP2-1808A-B2L2	FCP1-1805A-B2L2Y	10	FCP2-1808A-B2L2Y	FCP1-1805A-B2L2Z	12	FCP2-1808A-B2L2Z
5.0φ44x0.1			5.0φ44x0.1			5.0φ44x0.1		
Approx.124 g			Approx.124 g			Approx.124 g		

AC INDUCTIVE PLASTIC H0USING PROXIMITY SWITCH

ϕ20			M 30			ϕ34		
●	○		●	○		●	○	
5 mm	8 mm		10 mm	15 mm		15 mm	20 mm	
PBT RESIN			PBT RESIN			PBT RESIN		
●			●			●		
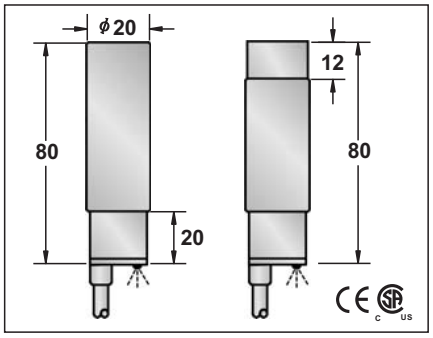			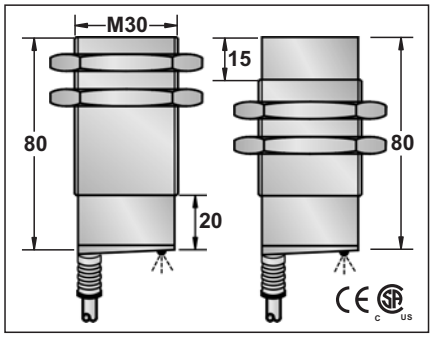			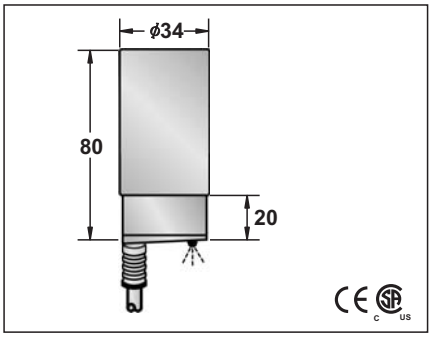		
20-250VAC			20-250VAC			20-250VAC		
-			-			-		
<1.8mA			<1.8mA			<1.8mA		
400mA			400mA			400mA		
<1.8mA			<1.8mA			<1.8mA		
5A(20ms)			5A(20ms)			5A(20ms)		
5mA			5mA			5mA		
<8VAC AT 400MA			<8VAC AT 400MA			<8VAC AT 400MA		
<25HZ			<25HZ			<25HZ		
10ms/10ms			10ms/10ms			10ms/10ms		
<15%(Sr)			<15%(Sr)			<15%(Sr)		
<1.0%(Sr)			<1.0%(Sr)			<1.0%(Sr)		
IP67			IP67			IP67		
-25°C - +70°C			-25°C - +70°C			-25°C - +70°C		
<10%(Sr)			<10%(Sr)			<10%(Sr)		
NO			NO			NO		
-			-			-		
-			-			-		
RFI>3V/m / EFT>1KV / ESD>4KV (contact)			RFI>3V/m / EFT>1KV / ESD>4KV (contact)			RFI>3V/m / EFT>1KV / ESD>4KV (contact)		
IEC 60947-5-2,Part 7.4.1 / IEC 60947-5-2,Part 7.4.2			IEC 60947-5-2,Part 7.4.1 / IEC 60947-5-2,Part 7.4.2			IEC 60947-5-2,Part 7.4.1 / IEC 60947-5-2,Part 7.4.2		
PBT			PBT			PBT		
FCP1-D2005A-A2L2	9	FCP2-D2008A-A2L2	FCP1-3010A-A2L2	9	FCP2-3015A-A2L2	FCP1-D3415A-A2L2	9	FCP2-D3420A-A2L2
FCP1-D2005A-B2L2	10	FCP2-D2008A-B2L2	FCP1-3010A-B2L2	10	FCP2-3015A-B2L2	FCP1-D3415A-B2L2	10	FCP2-D3420A-B2L2
5.8ϕ2x0.5			5.8ϕ2x0.5			5.8 ϕ2x0.5(5.8ϕ4x0.5)		
Approx.153 g			Approx.187 g			Approx.199 g		