AC INDUCTIVE PROXIMITY SWITCH CONNECTOR TYPE

ϕ11		M 12		M 18	
●	○	●	○	●	○
2 mm	4 mm	2 mm	4 mm	5 mm	8 mm
stainless steel or nickel plated brass		stainless steel or nickel plated brass		stainless steel or nickel plated brass	
●		●		●	

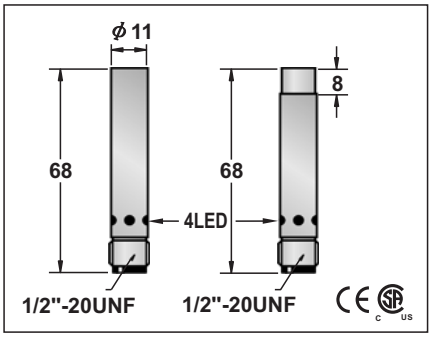

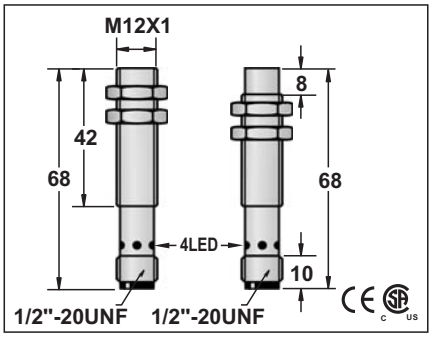

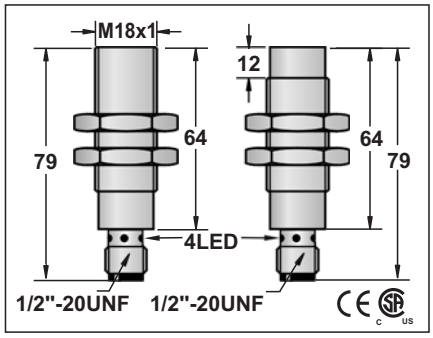

20-250VAC			20-250VAC			20-250VAC	
-			-			-	
<1.8mA			<1.8mA			<1.8mA	
400mA			400mA			400mA	
<1.8mA			<1.8mA			<1.8mA	
5A(20ms)			5A(20ms)			5A(20ms)	
5mA			5mA			5mA	
<8VAC at 200mA			<8VAC at 400MA			<8VAC at 200mA	
<25HZ			<25HZ			<25HZ	
10ms/10ms			10ms/10ms			10ms/10ms	
<15%(Sr)			<15%(Sr)			<15%(Sr)	
<1.0%(Sr)			<1.0%(Sr)			<1.0%(Sr)	
IP67			IP67			IP67	
-25°C - +70°C			-25°C - +70°C			-25°C - +70°C	
<10%(Sr)			<10%(Sr)			<10%(Sr)	
NO			NO			NO	
-			-			-	
-			-			-	
RFI>3V/m / EFT>1KV / ESD>4KV (contact)			RFI>3V/m / EFT>1KV / ESD>4KV (contact)			RFI>3V/m / EFT>1KV / ESD>4KV (contact)	
IEC 60947-5-2,Part 7.4.1 / IEC 60947-5-2,Part 7.4.2			IEC 60947-5-2,Part 7.4.1 / IEC 60947-5-2,Part 7.4.2			IEC 60947-5-2,Part 7.4.1 / IEC 60947-5-2,Part 7.4.2	
PBT			POM		PBT	PBT	
FCM1-D1102A-AUL3	56	FCM2-D1104A-AUL3	FCM1-1202A-AUL3	56	FCM2-1204A-AUL3	FCM1-1805A-AUL3	56	FCM2-1808A-AUL3
FCM1-D1102A-BUL3	56	FCM2-D1104A-BUL3	FCM1-1202A-BUL3	56	FCM2-1204A-BUL3	FCM1-1805A-BUL3	56	FCM2-1808A-BUL3
Approx.30 g		Approx.29 g	Approx.31 g		Approx.30 g	Approx.69 g	Approx.68 g

AC INDUCTIVE PROXIMITY SWITCH CONNECTOR TYPE

M 18		M 18		M 18	
●	○	●	○	●	○
5 mm	8 mm	5 mm	8 mm	5 mm	8 mm
stainless steel or nickel plated brass		stainless steel or nickel plated brass		stainless steel or nickel plated brass	
●		●		●	

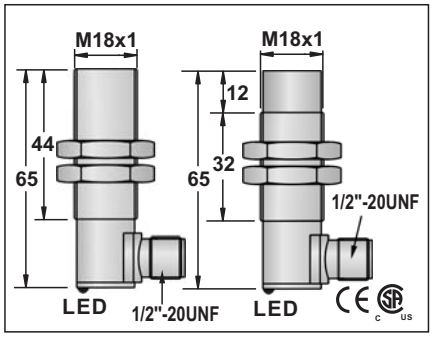

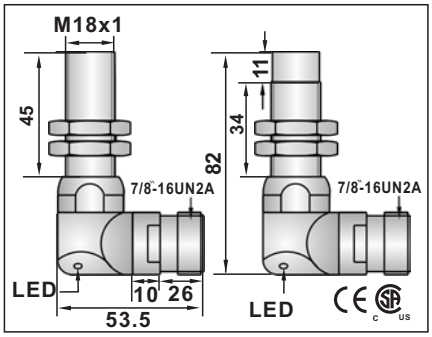

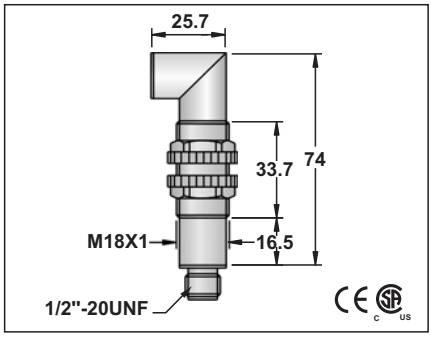

20-250VAC	20-250VAC	20-250VAC
-	-	-
<1.8mA	<1.8mA	<1.8mA
400mA	400mA	400mA
<1.8mA	<1.8mA	<1.8mA
5A(20ms)	5A(20ms)	5A(20ms)
5mA	5mA	5mA
<8VAC AT 400MA	<8VAC AT 400MA	<8VAC AT 400MA
<25HZ	<25HZ	<25HZ
10ms/10ms	10ms/10ms	10ms/10ms
<15%(Sr)	<15%(Sr)	<15%(Sr)
<1.0%(Sr)	<1.0%(Sr)	<1.0%(Sr)
IP67	IP67	IP67
-25°C - +70°C	-25°C - +70°C	-25°C - +70°C
<10%(Sr)	<10%(Sr)	<10%(Sr)
NO	NO	NO
-	-	-
-	-	-
RFI>3V/m / EFT>1KV / ESD>4KV (contact)	RFI>3V/m / EFT>1KV / ESD>4KV (contact)	RFI>3V/m / EFT>1KV / ESD>4KV (contact)
IEC 60947-5-2,Part 7.4.1 / IEC 60947-5-2,Part 7.4.2	IEC 60947-5-2,Part 7.4.1 / IEC 60947-5-2,Part 7.4.2	IEC 60947-5-2,Part 7.4.1 / IEC 60947-5-2,Part 7.4.2
PBT	PBT	PBT

FCM1-1805A-AUL3Y	56	FCM2-1808A-AUL3Y	FCM1-1805A-AZL3Y	56		FCM1-1805A-AUL3Z	56	FCM2-1808A-AUL3Z
FCM1-1805A-BUL3Y	56	FCM2-1808A-BUL3Y	FCM1-1805A-BZL3Y	56		FCM1-1805A-BUL3Z	56	FCM2-1808A-BUL3Z

FCM*-*****-*Z**Y

Z= 7/8-16UN2A
U=1/2-20UNF

Approx.69 g	Approx.68 g	Approx.251 g	Approx.283 g	Approx.69 g	Approx.68 g

AC INDUCTIVE PROXIMITY SWITCH CONNECTOR TYPE

M 30		
●	○	
10 mm	15 mm	
stainless steel or nickel plated brass		
●		
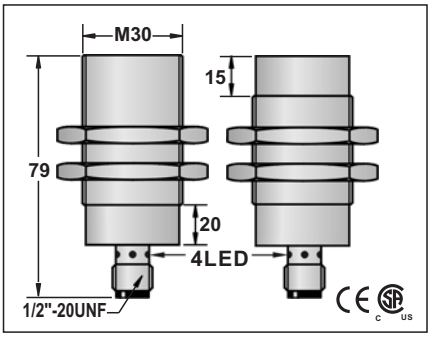		
20-250VAC		
-		
<1.8mA		
400mA		
<1.8mA		
5A(20ms)		
5mA		
<8VAC AT 400MA		
<25HZ		
10ms/10ms		
<15%(Sr)		
<1.0%(Sr)		
IP67		
-25°C - +70°C		
<10%(Sr)		
NO		
-		
-		
RFI>3V/m / EFT>1KV / ESD>4KV (contact)		
IEC 60947-5-2,Part 7.4.1 / IEC 60947-5-2,Part 7.4.2		
PBT		
FCM1-3010A-AUL3	56	FCM2-3015A-AUL3
FCM1-3010A-BUL3	56	FCM2-3015A-BUL3
Approx.147 g	Approx.137 g	

M 30		
●	○	
10 mm	15 mm	
stainless steel or nickel plated brass		
●		
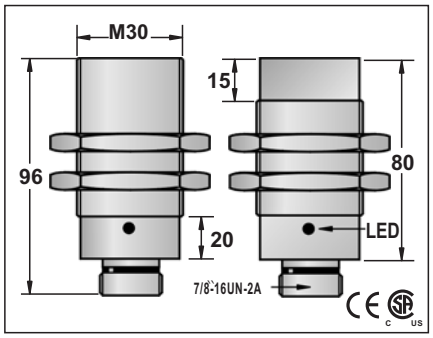		
20-250VAC		
-		
<1.8mA		
400mA		
<1.8mA		
5A(20ms)		
5mA		
<8VAC AT 400MA		
<25HZ		
10ms/10ms		
<15%(Sr)		
<1.0%(Sr)		
IP67		
-25°C - +70°C		
<10%(Sr)		
NO		
-		
-		
RFI>3V/m / EFT>1KV / ESD>4KV (contact)		
IEC 60947-5-2,Part 7.4.1 / IEC 60947-5-2,Part 7.4.2		
PBT		
FCM1-3010A-AZL3	65	FCM2-3015A-AZL3
FCM1-3010A-BZL3	65	FCM2-3015A-BZL3
Approx.187 g	Approx.179 g	

M 30		
●	○	
10 mm	15 mm	
stainless steel or nickel plated brass		
●		
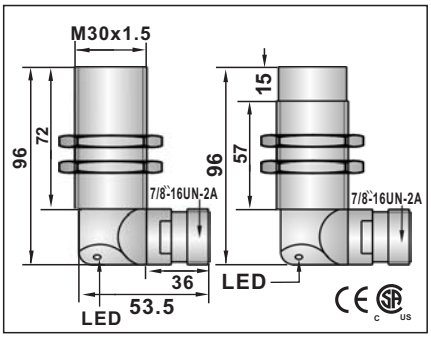		
20-250VAC		
-		
<1.8mA		
400mA		
<1.8mA		
5A(20ms)		
5mA		
<8VAC AT 400MA		
<25HZ		
10ms/10ms		
<15%(Sr)		
<1.0%(Sr)		
IP67		
-25°C - +70°C		
<10%(Sr)		
NO		
-		
-		
RFI>3V/m / EFT>1KV / ESD>4KV (contact)		
IEC 60947-5-2,Part 7.4.1 / IEC 60947-5-2,Part 7.4.2		
PBT		
FCM1-3010A-AZL3Y	65	FCM2-3015A-AZL3Y
FCM1-3010A-BZL3Y	65	FCM2-3015A-BZL3Y
Approx.311 g	Approx.356 g	

FCM*-*****-*Z**Y

Z= 7/8`-16UN2A
U=1/2`-20UNF